# CC1150 Low Power Sub-1 GHz RF Transmitter

## 1 Device Overview

### 1.1 Features

- Small Size
  - QLP 4-mm × 4-mm Package, 16 Pins
- True Single Chip UHF RF Transmitter
- Frequency Bands
  - 300 to 348 MHz
  - 400 to 464 MHz
  - 800 to 928 MHz
- Programmable Data Rate Up to 500 kBaud
- Low Current Consumption
- Programmable Output Power Up to +10 dBm for All Supported Frequencies
- Programmable Baseband Modulator
- Ideal For Multi-channel Operation
- Very Few External Components
  - Completely On-chip Frequency Synthesizer
  - No External Filters Needed
- Configurable Packet Handling Hardware
- Suitable for Frequency Hopping Systems Due to a Fast Settling Frequency Synthesizer
- Optional Forward Error Correction with Interleaving
- 64-byte TX Data FIFO
- Suited for Systems Compliant with EN 300 220 and FCC CFR Part 15
- Many Powerful Digital Features Allow a High-performance RF system to be made Using an Inexpensive Microcontroller
- Efficient SPI interface: All Registers Can be Programmed With One "Burst" Transfer
- Integrated Analog Temperature Sensor
- Lead-free “Green” Package
- Flexible Support for Packet Oriented Systems
  - On-chip Support for Sync-Word Insertion, Flexible Packet Length and Automatic CRC Handling
- OOK and Flexible ASK Shaping Supported
- 2-FSK, GFSK and MSK Supported
- Optional Automatic Whitening of Data
- Support for Asynchronous Transparent Transmit Mode for Backwards Compatibility with Existing Radio Communication Protocols

### 1.2 Applications

- Ultra-low Power UHF Wireless Transmitters
- Operating in the 315-, 433-, 868-, and 915-MHz ISM/SRD bands
- AMR – Automatic Meter Reading
- Consumer Electronics
- RKE – Remote Keyless Entry
- Low Power Telemetry
- Home and Building Automation
- Wireless Alarm and Security Systems
- Industrial Monitoring and Control
- Wireless Sensor Networks

### 1.3 Description

The CC1150 is a true single-chip UHF transmitter designed for very low power wireless applications. The circuit is mainly intended for the ISM (Industrial, Scientific and Medical) and SRD (Short Range Device) frequency bands at 315-, 433-, 868-, and 915-MHz, but can easily be programmed for operation at other frequencies in the 300 to 348 MHz, 400 to 464 MHz and 800 to 928 MHz bands.

The RF transmitter is integrated with a highly configurable baseband modulator. The modulator supports various modulation formats and has a configurable data rate up to 500 kBaud. The CC1150 device provides extensive hardware support for packet handling, data buffering and burst transmissions.

The main operating parameters and the 64-byte transmit FIFO of CC1150 can be controlled via an SPI interface. In a typical system, the CC1150 device will be used together with a microcontroller and a few additional passive components.

CC1150 is part of the SmartRF™ technology platform based on 0.18-µm CMOS technology from Texas Instruments.

An IMPORTANT NOTICE at the end of this data sheet addresses availability, warranty, changes, use in safety-critical applications, intellectual property matters and other important disclaimers. PRODUCTION DATA.

**Table 1-1. Device Information(1)**

| PART NUMBER | PACKAGE | BODY SIZE |
|---|---|---|
| CC1150 | VQFNP (16) | 4.00 mm × 4.00 mm |

(1) For more information, see Section 8, *Mechanical Packaging and Orderable Information*.

## 1.4 Functional Block Diagram

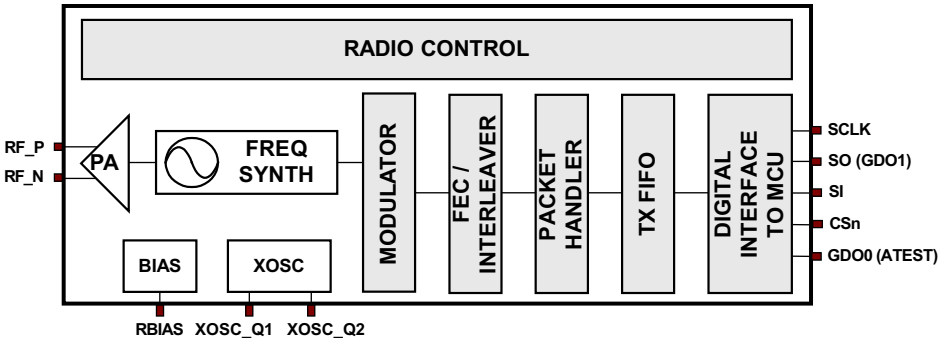



Copyright © 2006–2015, Texas Instruments Incorporated

# Table of Contents

**1 Device Overview** ..... **1**
1.1 Features ..... 1
1.2 Applications ..... 1
1.3 Description ..... 1
1.4 Functional Block Diagram ..... 2
**2 Revision History** ..... **4**
**3 Terminal Configuration and Functions** ..... **5**
3.1 Pin Attributes ..... 5
**4 Specifications** ..... **6**
4.1 Absolute Maximum Ratings ..... 6
4.2 ESD Ratings ..... 6
4.3 Recommended Operating Conditions ..... 6
4.4 General Characteristics ..... 6
4.5 Current Consumption ..... 7
4.6 RF Transmit ..... 7
4.7 Crystal Oscillator ..... 8
4.8 Frequency Synthesizer Characteristics ..... 8
4.9 Analog Temperature Sensor ..... 9
4.10 DC Characteristics ..... 9
4.11 Power-On Reset ..... 10
4.12 Thermal Resistance Characteristics for *VQFNP* Package ..... 10
**5 Detailed Description** ..... **11**
5.1 Overview ..... 11
5.2 Functional Block Diagram ..... 11
5.3 Configuration Overview ..... 11
5.4 Configuration Software ..... 12
5.5 4-wire Serial Configuration and Data Interface ..... 13
5.6 Microcontroller Interface and Pin Configuration ..... 17
5.7 Data Rate Programming ..... 18
5.8 Packet Handling Hardware Support ..... 19
5.9 Modulation Formats ..... 23
5.10 Forward Error Correction with Interleaving ..... 24
5.11 Radio Control ..... 26
5.12 Data FIFO ..... 29
5.13 Frequency Programming ..... 31
5.14 VCO ..... 31
5.15 Voltage Regulators ..... 32
5.16 Output Power Programming ..... 32
5.17 General Purpose and Test Output Control Pins ..... 33
5.18 Asynchronous and Synchronous Serial Operation ..... 35
5.19 System Considerations and Guidelines ..... 36
5.20 Memory ..... 38
**6 Applications, Implementation, and Layout** ..... **51**
6.1 Application Information ..... 51
6.2 Design Requirements ..... 53
6.3 PCB Layout Recommendations ..... 55
**7 Device and Documentation Support** ..... **58**
7.1 Device Support ..... 58
7.2 Documentation Support ..... 58
7.3 Trademarks ..... 59
7.4 Electrostatic Discharge Caution ..... 59
7.5 Export Control Notice ..... 59
7.6 Glossary ..... 59
**8 Mechanical Packaging and Orderable Information** ..... **59**
8.1 Packaging Information ..... 59

Copyright © 2006–2015, Texas Instruments Incorporated

## 2 Revision History

This data manual revision history highlights the changes made to the SWRS037A device-specific data manual to make it an SWRS037B revision.

| Changes from January 1, 2006 to February 19, 2015 | Page |
|---|---|
| • Updated RST package to RGV. | 58 |


Copyright © 2006–2015, Texas Instruments Incorporated

# 3 Terminal Configuration and Functions

The CC1150 pinout is shown in Figure 3-1 and Table 3-1

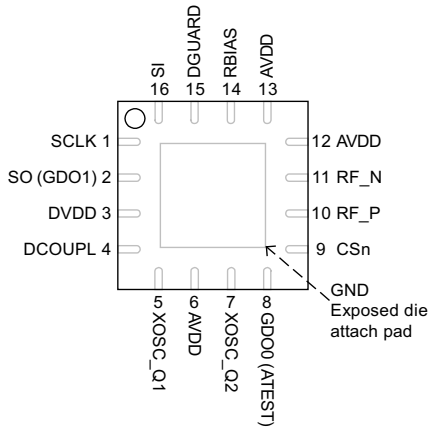


**Figure 3-1. Pinout Top View**

## 3.1 Pin Attributes

**Table 3-1. Pin Attributes(1)**

| PIN NO. | PIN NAME | TYPE | DESCRIPTION |
|---|---|---|---|
| 1 | SCLK | Digital Input | Serial configuration interface, clock input. |
| 2 | SO (GDO1) | Digital Output | Serial configuration interface, data output.<br>Optional general output pin when CSn is high. |
| 3 | DVDD | Power (Digital) | 1.8-V to 3.6-V digital power supply for digital I/Os and for the digital core voltage regulator. |
| 4 | DCOUPL(2) | Power (Digital) | 1.6-V to 2.0-V digital power supply output for decoupling. |
| 5 | XOSC_Q1 | Analog I/O | Crystal oscillator pin 1, or external clock input. |
| 6 | AVDD | Power (Analog) | 1.8-V to 3.6-V analog power supply connection. |
| 7 | XOSC_Q2 | Analog I/O | Crystal oscillator pin 2. |
| 8 | GDO0<br>(ATEST) | Digital I/O | Digital output pin for general use:<br>• Test signals<br>• FIFO status signals<br>• Clock output, down-divided from XOSC<br>• Serial input TX data<br>Also used as analog test I/O for prototype/production testing. |
| 9 | CSn | Digital Input | Serial configuration interface, chip select. |
| 10 | RF_P | RF I/O | Positive RF output signal from PA. |
| 11 | RF_N | RF I/O | Negative RF output signal from PA. |
| 12 | AVDD | Power (Analog) | 1.8-V to 3.6-V analog power supply connection. |
| 13 | AVDD | Power (Analog) | 1.8-V to 3.6-V analog power supply connection. |
| 14 | RBIAS | Analog I/O | External bias resistor for reference current. |
| 15 | DGUARD | Power (Digital) | Power supply connection for digital noise isolation. |
| 16 | SI | Digital Input | Serial configuration interface, data input. |

(1) The exposed die attach pad must be connected to a solid ground plane as this is the main ground connection for the chip.
(2) This pin is intended for use with the CC1150 only. It can not be used to provide supply voltage to other devices.

# 4 Specifications

## 4.1 Absolute Maximum Ratings(1)(2)

over operating free-air temperature range (unless otherwise noted)

| | MIN | MAX | UNIT | CONDITION |
|---|---|---|---|---|
| Supply voltage | –0.3 | 3.6 | V | All supply pins must have the same voltage |
| Voltage on any digital pin | –0.3 | VDD + 0.3, max 3.6 | V | |
| Voltage on the pins RF_P, RF_N and DCOUPL | –0.3 | 2.0 | V | |
| Voltage ramp-up | | 120 | kV/µs | |
| Input RF level | | +10 | dBm | |
| Storage temperature range, $T_{stg}$ | –50 | 150 | °C | |

(1) Stresses beyond those listed under absolute maximum ratings may cause permanent damage to the device. These are stress ratings only, and functional operation of the device at these or any other conditions beyond those indicated under recommended operating conditions is not implied. Exposure to absolute-maximum-rated conditions for extended periods may affect device reliability.
(2) All voltage values are with respect to $V_{SS}$, unless otherwise noted.

## 4.2 ESD Ratings

| | | | VALUE | UNIT |
|---|---|---|---|---|
| $V_{(ESD)}$ | Electrostatic discharge | Human-body model (HBM), per ANSI/ESDA/JEDEC JS-001(1)(2) | < 500 | V |
| | | Charged-device model (CDM) | 250 | |

(1) JEDEC document JEP155 states that 500-V HBM allows safe manufacturing with a standard ESD control process. Manufacturing with less than 500-V HBM is possible with the necessary precautions.
(2) According to JEDEC STD 22, method A114, Human Body Model

## 4.3 Recommended Operating Conditions

over operating free-air temperature range (unless otherwise noted)

| | MIN | MAX | UNIT | CONDITION |
|---|---|---|---|---|
| Operating temperature | –40 | 85 | °C | |
| Operating supply voltage | 1.8 | 3.6 | V | All supply pins must have the same voltage |

## 4.4 General Characteristics

over recommended operating conditions (unless otherwise noted)

| PARAMETER | MIN | TYP | MAX | UNIT | CONDITION |
|---|---|---|---|---|---|
| Frequency range | 300 | | 348 | MHz | |
| | 400 | | 464 | MHz | |
| | 800 | | 928 | MHz | |
| Data rate | 1.2 | | 500 | kBaud | 2-FSK |
| | 1.2 | | 250 | kBaud | GFSK, OOK and ASK |
| | 26 | | 500 | kBaud | (Shaped) MSK (also known as differential offset QPSK) Optional Manchester encoding (the data rate in kbps will be half the baud rate) |


Copyright © 2006–2015, Texas Instruments Incorporated

## 4.5 Current Consumption

$T_c$ = 25°C, VDD = 3.0 V if nothing else stated. All measurement results are obtained using the CC1150EM reference design (see [1] and [2]).

| PARAMETER | TYP | UNIT | CONDITION |
|---|---|---|---|
| Current consumption | 200 | nA | Voltage regulator to digital part off, register values lost (SLEEP state) |
| | 222 | µA | Voltage regulator to digital part on, all other modules in power down (XOFF state) |
| | 1.1 | mA | Only voltage regulator to digital part and crystal oscillator running (IDLE state) |
| | 7.7 | mA | Only the frequency synthesizer running (FSTXON state). This current consumption also representative for the other intermediate states when going from IDLE until reaching TX, and frequency calibration states |
| Current consumption, 315 MHz | 25.6 | mA | Transmit mode, +10 dBm output power (0xC4) |
| | 14.1 | mA | Transmit mode, 0 dBm output power (0x60)<br>See more in *Section 5.16* and *DN012* [3]. |
| Current consumption, 433 MHz | 26.1 | mA | Transmit mode, +10 dBm output power (0xC2) |
| | 14.6 | | Transmit mode, 0 dBm output power (0x60)<br>See more in *Section 5.16* and *DN012* [3]. |
| Current consumption, 868 MHz | 29.3 | mA | Transmit mode, +10 dBm output power (0xC3) |
| | 15.5 | | Transmit mode, 0 dBm output power (0x60)<br>See more in *Section 5.16* and *DN012* [3]. |
| Current consumption, 915 MHz | 29.3 | mA | Transmit mode, +10 dBm output power (0xC0) |
| | 15.2 | mA | Transmit mode, 0 dBm output power (0x50)<br>See more in *Section 5.16* and *DN012* [3]. |

## 4.6 RF Transmit

$T_c$ = 25°C, VDD = 3.0 V, if nothing else stated. All measurement results are obtained using the CC1150EM reference design (see [1] and [2]).

| PARAMETER | | TYP | MAX | UNIT | CONDITION |
|---|---|---|---|---|---|
| Differential load impedance | 315 MHz | 122 + j31 | | Ω | Differential impedance as seen from the RF-port (RF_P and RF_N) towards the antenna. Follow the CC1150EM reference design (see [1] and [2]). |
| | 433 MHz | 116 + j41 | | Ω | |
| | 868/915 MHz | 86.5 + j43 | | Ω | |
| Output power, highest setting | | +10 | | dBm | Output power is programmable, and full range is available across all frequency bands. Output power may be restricted by regulatory limits. See also *DN006* [5].<br>Delivered to a 50-Ω single-ended load via CC1150 EM reference design (see [1] and [2]) RF matching network. Maximum output power can be increased 1 to 2 dB by using wire-wound inductors instead of multilayer inductors in the balun and filter circuit for the 868/915 MHz band, see more in *DN017* [6]. |
| Output power, lowest setting | | –30 | | dBm | Output power is programmable, and full range is available across all frequency bands.<br>Delivered to a 50 Ω single-ended load via CC1150 EM reference design (see [1] and [2]) RF matching network. |

Copyright © 2006–2015, Texas Instruments Incorporated

## RF Transmit *(continued)*

$T_c$ = 25°C, VDD = 3.0 V, if nothing else stated. All measurement results are obtained using the CC1150EM reference design (see [1] and [2]).

| PARAMETER | | TYP | MAX | UNIT | CONDITION |
|---|---|---|---|---|---|
| Spurious emissions and harmonics(1), 433/868 MHz | 25 MHz to 1 GHz | | –36 | dBm | |
| | 47 to 74 MHz, 87.5 to 118 MHz, 174 to 230 MHz, 470 to 862 MHz | | –54 | dBm | |
| | Otherwise above 1 GHz | | –30 | dBm | |
| Spurious emissions, 315/915 MHz | < 200 µV/m at 3 m below 960 MHz | | –49.2 | dBm EIRP | |
| | < 500 µV/m at 3 m above 960 MHz | | –41.2 | dBm EIRP | |
| Harmonics 315 MHz | 2nd, 3rd and 4th harmonic | | –20 | dBc | Whe output power is maximum 6 mV/m at 3 m (–19.6 dBm EIRP) |
| | 5th harmonic | | –41.2 | dBm | |
| Harmonics 915 MHz | 2nd harmonic | | –20 | dBc | With +10 dBm output power |
| | 3rd, 4th, and 5th harmonic | | –41.2 | dBm | |
| TX latency | | 8 | | Bits | Serial operation. Time from sampling the data on the transmitter data input pin until it is observed on the RF output ports. |

(1) Note that close-in spurs vary with centre frequency and limits the frequencies and output power level which the CC1150 can operate at without violating regulatory restrictions. See also *Section 6.2.5* for information regarding additional filtering.

## 4.7 Crystal Oscillator

$T_c$ = 25°C, VDD = 3.0 V if nothing else is stated. All measurement results obtained using the CC1150EM reference design (see [1] and [2]).

| PARAMETER | MIN | TYP | MAX | UNIT | CONDITION |
|---|---|---|---|---|---|
| Crystal frequency | 26 | 26 | 27 | MHz | |
| Tolerance | | ±40 | | ppm | This is the total tolerance including a) initial tolerance, b) aging and c) temperature dependence.<br>The acceptable crystal tolerance depends on RF frequency and channel spacing / bandwidth |
| Load capacitance | 10 | 13 | 20 | pF | Simulated over operating conditions |
| ESR | | | 100 | Ω | |
| Start-up time | | 150 | | µs | Measured on the CC1150EM reference design (see [1] and [2]). This parameter is to a large degree crystal dependent. |

## 4.8 Frequency Synthesizer Characteristics

$T_c$ = 25°C, VDD = 3.0 V if nothing else is stated. All measurement results obtained using the CC1150EM reference design (see [1] and [2]).

| PARAMETER | MIN | TYP | MAX | UNIT | CONDITION |
|---|---|---|---|---|---|
| Programmed frequency resolution | 397 | $F_{XOSC} / 2^{16}$ | 412 | Hz | 26 MHz to 27 MHz crystals. The resolution (in Hz) is equal for all frequency bands. |
| Synthesizer frequency tolerance | | ±40 | | ppm | Given by crystal used. Required accuracy (including temperature and aging) depends on frequency band and channel bandwidth / spacing. |
| RF carrier phase noise | | –82 | | dBc/Hz | @ 50 kHz offset from carrier, carrier at 868 MHz |
| RF carrier phase noise | | –86 | | dBc/Hz | @ 100 kHz offset from carrier, carrier at 868 MHz |


Copyright © 2006–2015, Texas Instruments Incorporated

## Frequency Synthesizer Characteristics *(continued)*

$T_c$ = 25°C, VDD = 3.0 V if nothing else is stated. All measurement results obtained using the CC1150EM reference design (see [1] and [2]).

| PARAMETER | MIN | TYP | MAX | UNIT | CONDITION |
|---|---|---|---|---|---|
| RF carrier phase noise | | –90 | | dBc/Hz | @ 200 kHz offset from carrier, carrier at 868 MHz |
| RF carrier phase noise | | –98 | | dBc/Hz | @ 500 kHz offset from carrier, carrier at 868 MHz |
| RF carrier phase noise | | –106 | | dBc/Hz | @ 1 MHz offset from carrier, carrier at 868 MHz |
| RF carrier phase noise | | –113 | | dBc/Hz | @ 2 MHz offset from carrier, carrier at 868 MHz |
| RF carrier phase noise | | –119 | | dBc/Hz | @ 5 MHz offset from carrier, carrier at 868 MHz |
| RF carrier phase noise | | –127 | | dBc/Hz | @ 10 MHz offset from carrier, carrier at 868 MHz |
| PLL turn-on / hop time | 85.1 | 88.4 | 88.4 | µs | Time from leaving the IDLE state until arriving in the FSTXON or TX state, when not performing calibration.<br>Crystal oscillator running. |
| PLL calibration time | | 18739 | | XOSC cycles | Calibration can be initiated manually or automatically before entering or after leaving TX. |
| | 694 | 721 | 721 | µs | Min/typ/max time is for 27/26/26 MHz crystal frequency. |

## 4.9 Analog Temperature Sensor(1)

$T_c$ = 25°C, VDD = 3.0 V if nothing else is stated.

| PARAMETER | MIN | TYP | MAX | UNIT | CONDITION |
|---|---|---|---|---|---|
| Output voltage at –40°C | | 0.651 | | V | |
| Output voltage at 0°C | | 0.747 | | V | |
| Output voltage at +40°C | | 0.847 | | V | |
| Output voltage at +80°C | | 0.945 | | V | |
| Temperature coefficient | | 2.45 | | mV/°C | Fitted from –20°C to +80°C |
| Absolute error in calculated temperature | –2(2) | | 2(2) | °C | From –20°C to +80°C when using 2.45 mV / °C, after 1-point calibration at room temperature |
| Current consumption increase when enabled | | 0.3 | | mA | |

(1) It is necessary to write 0xBF to the PTEST register to use the analog temperature sensor in the IDLE state.
(2) Indicated minimum and maximum error with 1-point calibration is based on simulated values for typical process parameters

## 4.10 DC Characteristics

$T_c$ = 25°C if nothing else stated.

| DIGITAL INPUTS/OUTPUTS | MIN | MAX | UNIT | CONDITION |
|---|---|---|---|---|
| Logic "0" input voltage | 0 | 0.7 | V | |
| Logic "1" input voltage | VDD – 0.7 | VDD | V | |
| Logic "0" output voltage | 0 | 0.5 | V | For up to 4 mA output current |
| Logic "1" output voltage | VDD – 0.3 | VDD | V | For up to 4 mA output current |
| Logic "0" input current | N/A | –1 | µA | Input equals 0 V |
| Logic "1" input current | N/A | 1 | µA | Input equals VDD |

Copyright © 2006–2015, Texas Instruments Incorporated

## 4.11 Power-On Reset

For proper Power-On-Reset functionality, the power supply must comply with the requirements in this table. Otherwise, the chip should be assumed to have unknown state until transmitting an SRES strobe over the SPI interface. See *Section 5.11.1* for a description of the recommended start-up sequence after turning power on.

| PARAMETER | MIN | TYP | MAX | UNIT | CONDITION |
|---|---|---|---|---|---|
| Power up ramp-up time | | | 5 | ms | From 0 V until reaching 1.8 V |
| Power-off time | 1 | | | ms | Minimum time between power on and power off |

## 4.12 Thermal Resistance Characteristics for *VQFNP* Package

| NAME | DESCRIPTION | °C/W (1) (2) |
|---|---|---|
| $R_{\theta JC(top)}$ | Junction-to-case (top) | 54.0 |
| $R_{\theta JB}$ | Junction-to-board | 25.1 |
| $R_{\theta JA}$ | Junction-to-free air | 48.3 |
| $Psi_{JT}$ | Junction-to-package top | 1.6 |
| $Psi_{JB}$ | Junction-to-board | 25.2 |
| $R_{\theta JC(bottom)}$ | Junction-to-case (bottom) | 6.3 |

(1) °C/W = degrees Celsius per watt.
(2) These values are based on a JEDEC-defined 2S2P system (with the exception of the Theta JC [$R_{\theta JC}$] value, which is based on a JEDEC-defined 1S0P system) and will change based on environment as well as application. For more information, see these EIA/JEDEC standards:
- JESD51-2, *Integrated Circuits Thermal Test Method Environmental Conditions - Natural Convection (Still Air)*
- JESD51-3, *Low Effective Thermal Conductivity Test Board for Leaded Surface Mount Packages*
- JESD51-7, *High Effective Thermal Conductivity Test Board for Leaded Surface Mount Packages*
- JESD51-9, *Test Boards for Area Array Surface Mount Package Thermal Measurements*

Power dissipation of 2 W and an ambient temperature of 70ºC is assumed.


Copyright © 2006–2015, Texas Instruments Incorporated

# 5 Detailed Description

## 5.1 Overview

The CC1150 transmitter is based on direct synthesis of the RF frequency. The frequency synthesizer includes a completely on-chip LC VCO.

A crystal is to be connected to XOSC_Q1 and XOSC_Q2. The crystal oscillator generates the reference frequency for the synthesizer, as well as clocks for the digital part. A 4-wire SPI serial interface is used for configuration and data buffer access. The digital baseband includes support for channel configuration, packet handling and data buffering.

## 5.2 Functional Block Diagram

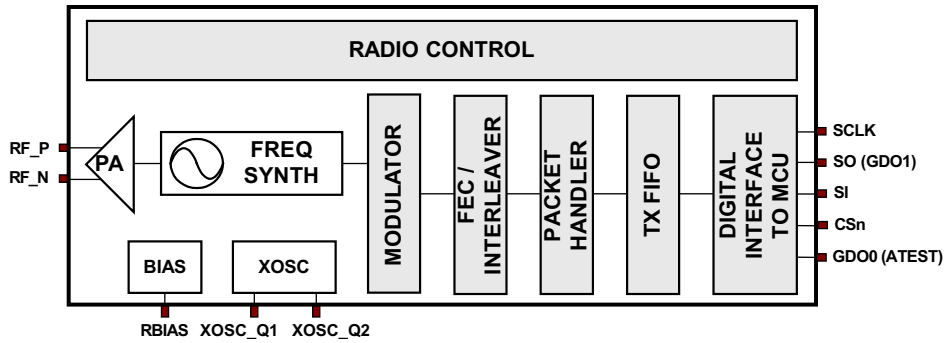


**Figure 5-1. CC1150 Simplified Block Diagram**

## 5.3 Configuration Overview

CC1150 can be configured to achieve optimum performance for many different applications. Configuration is done using the SPI interface. The following key parameters can be programmed:

- Power-down and power-up mode
- Crystal oscillator power up and power down
- Transmit mode
- RF channel selection
- Data rate
- Modulation format
- RF output power
- Data buffering with 64-byte transmit FIFO
- Packet radio hardware support
- Forward Error Correction with interleaving
- Data Whitening

Details of each configuration register can be found in *Section 5.20*.

Figure 5-2 shows a simplified state diagram that explains the main CC1150 states, together with typical usage and current consumption. For detailed information on controlling the CC1150 state machine, and a complete state diagram, see *Section 5.11*.

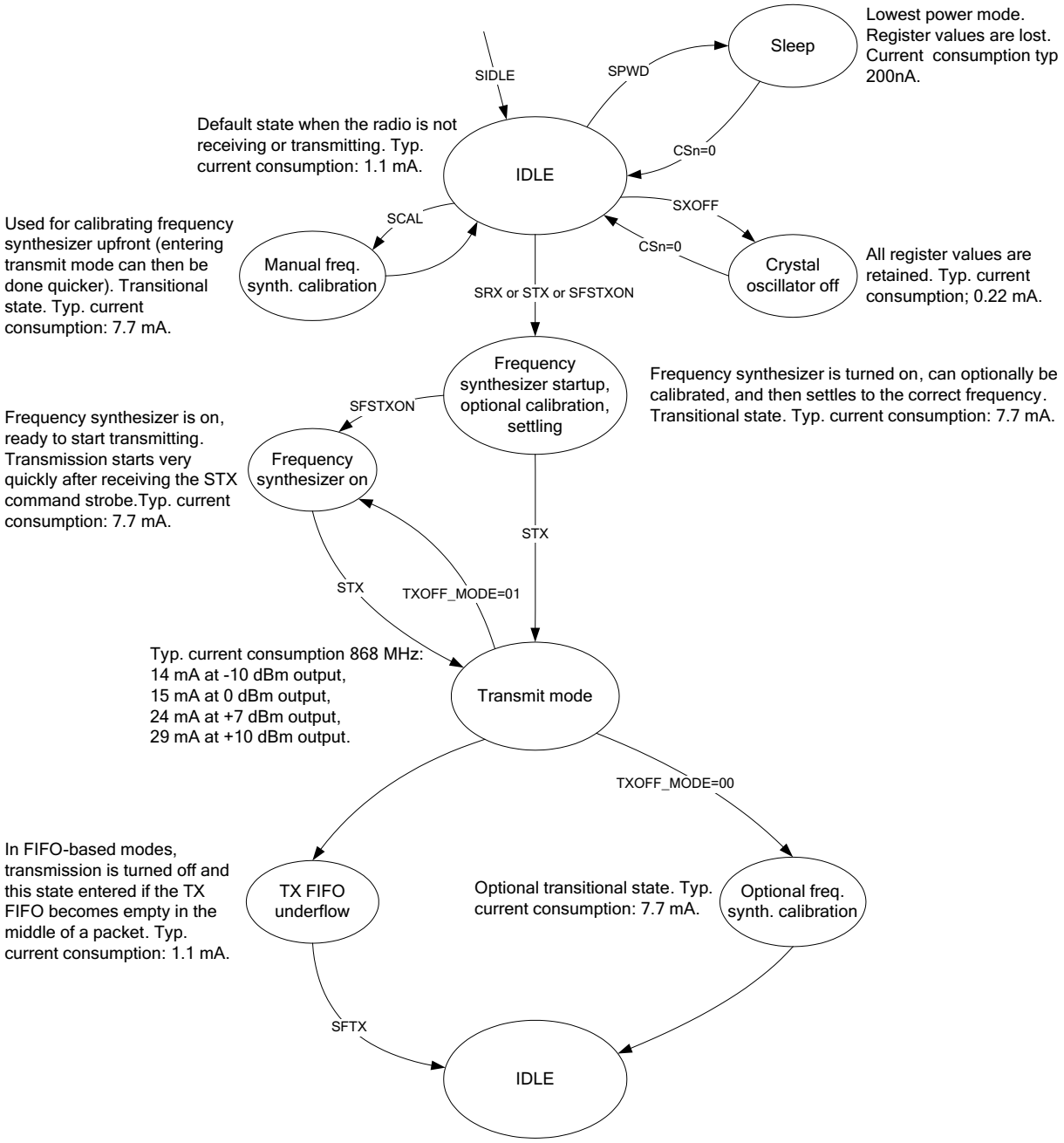


**Figure 5-2. Simplified State Diagram with Typical Usage and Current Consumption**

## 5.4 Configuration Software

CC1150 can be configured using the SmartRF Studio [11] software. The SmartRF Studio software is highly recommended for obtaining optimum register settings, and for evaluating performance and functionality. A screenshot of the SmartRF Studio user interface for CC1150 is shown in Figure 5-3.

After chip reset, all the registers have default values as shown in the tables in *Section 5.20*. The optimum register setting might differ from the default value. After a reset all registers that shall be different from the default value therefore needs to be programmed through the SPI interface.


Copyright © 2006–2015, Texas Instruments Incorporated

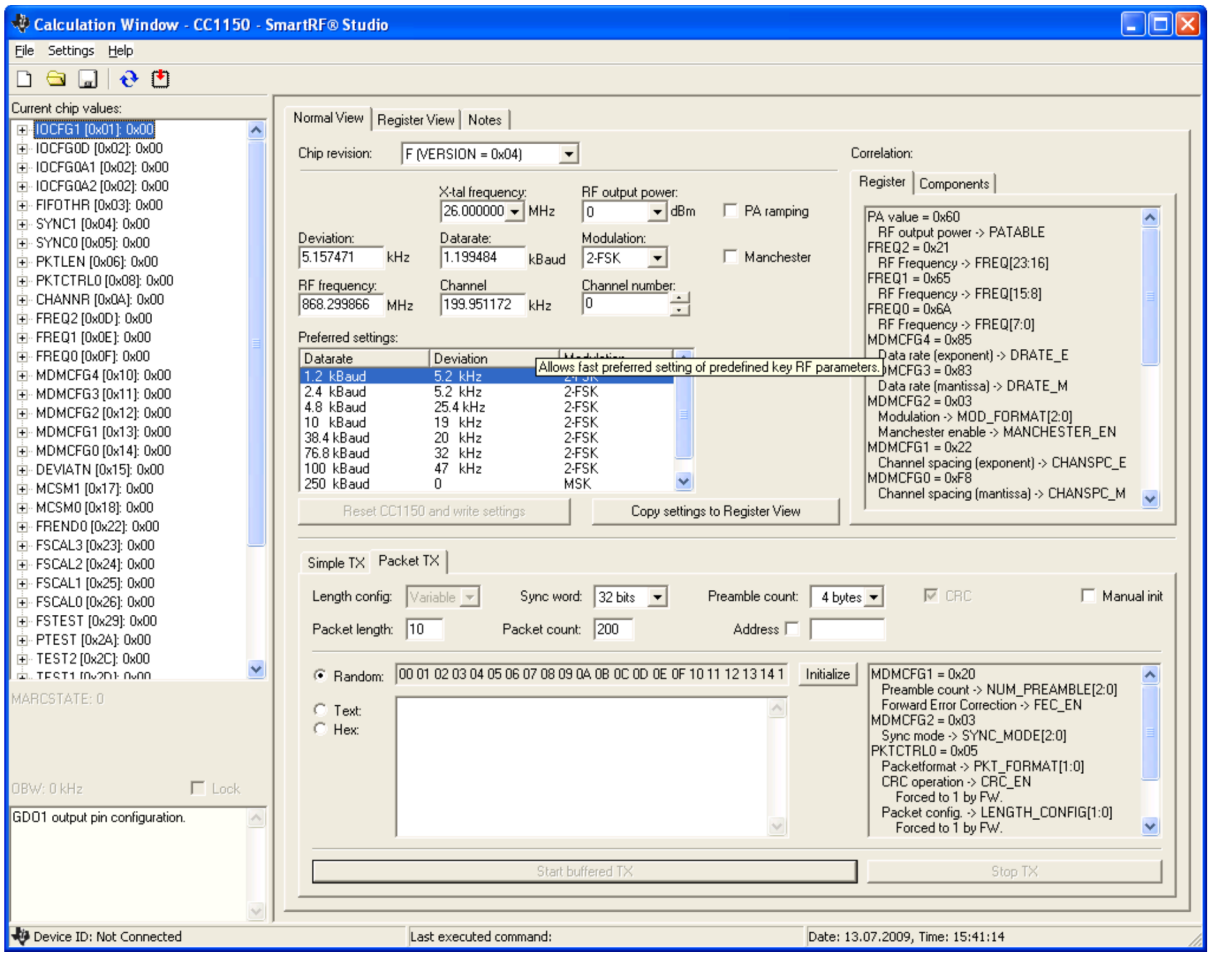


**Figure 5-3. SmartRF Studio User Interface**

## 5.5 4-wire Serial Configuration and Data Interface

CC1150 is configured via a simple 4-wire SPI-compatible interface (SI, SO, SCLK and CSn) where CC1150 is the slave. This interface is also used to read and write buffered data. All address and data transfer on the SPI interface is done most significant bit first.

All transactions on the SPI interface start with a header byte containing a read/write bit, a burst access bit and a 6-bit address.

During address and data transfer, the CSn pin (Chip Select, active low) must be kept low. If CSn goes high during the access, the transfer will be cancelled. The timing for the address and data transfer on the SPI interface is shown in Figure 5-4 with reference to Table 5-1.

When CSn is pulled low, the MCU must wait until the CC1150 SO pin goes low before starting to transfer the header byte. This indicates that the voltage regulator has stabilized and the crystal is running. Unless the chip is in the SLEEP or XOFF states, the SO pin will always go low immediately after taking CSn low.

Copyright © 2006–2015, Texas Instruments Incorporated

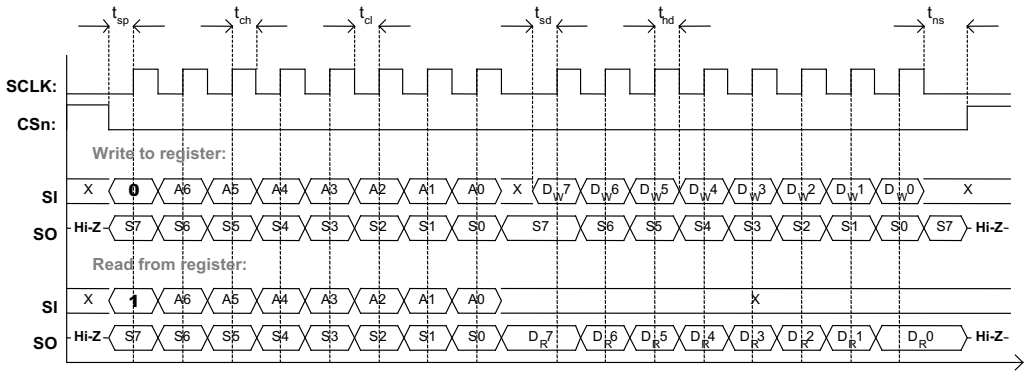


**Figure 5-4. Configuration Registers Write and Read Operations**

**Table 5-1. SPI Interface Timing Requirements**

| PARAMETER | DESCRIPTION | | MIN | MAX | UNIT |
|---|---|---|---|---|---|
| $f_{SCLK}$ | SCLK frequency<br>100 ns delay inserted between address byte and data byte (single access), or between address and data, and between each data byte (burst access). | | — | 10 | MHz |
| | SCLK frequency, single access<br>No delay between address and data byte | | | 9 | |
| | SCLK frequency, burst access<br>No delay between address and data byte, or between data bytes | | | 6.5 | |
| $t_{sp,pd}$ | CSn low to positive edge on SCLK, in power-down mode | | 150 | — | µs |
| $t_{sp}$ | CSn low to positive edge on SCLK, in active mode | | 20 | — | ns |
| $t_{ch}$ | Clock high | | 50 | — | ns |
| $t_{cl}$ | Clock low | | 50 | — | ns |
| $t_{rise}$ | Clock rise time | | — | 5 | ns |
| $t_{fall}$ | Clock fall time | | — | 5 | ns |
| $t_{sd}$ | Setup data (negative SCLK edge) to positive edge on SCLK | Single access | 55 | — | ns |
| | ($t_{sd}$ applies between address and data bytes, and between data bytes) | Burst access | 76 | — | ns |
| $t_{hd}$ | Hold data after positive edge on SCLK | | 20 | — | ns |
| $t_{ns}$ | Negative edge on SCLK to CSn high | | 20 | — | ns |

**NOTE**

The minimum $t_{sp,pd}$ figure in Table 5-1 can be used in cases where the user does not read the CHIP_RDYn signal. CSn low to positive edge on SCLK when the chip is woken from power-down depends on the start-up time of the crystal being used. The 150 µs in Table 5-1 is the crystal oscillator start-up time measured using crystal AT-41CD2 from NDK.

### *5.5.1 Chip Status Byte*

When the header byte, data byte or command strobe is sent on the SPI interface, the chip status byte is sent by the CC1150 on the SO pin. The status byte contains key status signals, useful for the MCU. The first bit, s7, is the CHIP_RDYn signal; this signal must go low before the first positive edge of SCLK. The CHIP_RDYn signal indicates that the crystal is running and the regulated digital supply voltage is stable.

Bit 6, 5 and 4 comprises the STATE value. This value reflects the state of the chip. The XOSC and power to the digital core is on in the IDLE state, but all other modules are in power down. The frequency and channel configuration should only be updated when the chip is in this state. The TX state will be active when the chip is transmitting.


Copyright © 2006–2015, Texas Instruments Incorporated

The last four bits (3:0) in the status byte con-tains FIFO_BYTES_AVAILABLE. This field contains the number of bytes free for writing into the TX FIFO. When FIFO_BYTES_AVAILABLE=15, 15 or more bytes are free. Table 5-2 gives a status byte summary.

**Table 5-2. Status Byte Summary**

| BITS | NAME | DESCRIPTION |
|---|---|---|
| 7 | CHIP_RDYn | Stays high until power and crystal have stabilized. Should always be low when using the SPI interface. |
| 6:04 | STATE[2:0] | Indicates the current main state machine mode.<br>The binary number is the value, the result is the state, and the definition is the current main state machine mode.<br>000 = Idle : IDLE state(1)<br>001 = Not used : Not used<br>010 = TX : Transmit mode<br>011 = FSTXON : Fast TX ready<br>100 = CALIBRATE : Frequency synthesizer calibration is running<br>101 = SETTLING : PLL is settling<br>110 = Not used : Not used<br>111 = TXFIFO_UNDERFLOW : TX FIFO has underflowed. Acknowledge with SFTX |
| 3:00 | FIFO_BYTES_AVAILABLE[3:0] | The number of free bytes in the TX FIFO. |

(1) Also reported for some transitional states instead of SETTLING or CALIBRATE, due to a small error.

### 5.5.2 Register Access

The configuration registers on the CC1150 are located on SPI addresses from 0x00 to 0x2E. Table 5-12 lists all configuration registers. The detailed description of each register is found in *Section 5.20*.

All configuration registers can be both written and read. The read/write bit controls if the register should be written or read. When writing to registers, the status byte is sent on the SO pin each time a header byte or data byte is transmitted on the SI pin. When reading from registers, the status byte is sent on the SO pin each time a header byte is transmitted on the SI pin.

Registers with consecutive addresses can be accessed in an efficient way by setting the burst bit in the address header. The address sets the start address in an internal address counter. This counter is incremented by one each new byte (every 8 clock pulses). The burst access is either a read or a write access and must be terminated by setting CSn high.

For register addresses in the range 0x30 through 0x3D, the burst bit is used to select between status registers (burst bit is 1) and command strobes (burst bit is 0). See more in *Section 5.5.3*. Because of this, burst access is not available for status registers, so they must be read one at a time. The status registers can only be read.

### 5.5.3 SPI Read

When reading register fields over the SPI interface while the register fields are updated by the radio hardware (for example, MARCSTATE or TXBYTES), there is a small, but finite, probability that a single read from the register is being corrupt. As an example, the probability of any single read from TXBYTES being corrupt, assuming the maximum data rate is used, is approximately 80 ppm. Refer to the *CC1150 Errata Notes* [8] for more details.

### 5.5.4 Command Strobes

Command Strobes may be viewed as single byte instructions to CC1150. By addressing a Command Strobe register, internal sequences will be started. These commands are used to disable the crystal oscillator, enable transmit mode, flush the TX FIFO, and so on. The nine command strobes are listed in Table 5-11.

**NOTE**

An SIDLE strobe will clear all pending command strobes until IDLE state is reached. This means that if for example an SIDLE strobe is issued while the radio is in TX state, any other command strobes issued before the radio reaches IDLE state will be ignored.

The command strobe registers are accessed in the same way as for a register write operation, but no data is transferred. That is, only the R/W bit (set to 0), burst access (set to 0) and the six address bits (in the range 0x30 through 0x3D) are written.

When writing command strobes, the status byte is sent on the SO pin.

A command strobe may be followed by any other SPI access without pulling CSn high. However, if an SRES command strobe is being issued, on will have to wait for the SO pin to go low before the next command strobe can be issued as shown in Figure 5-5.The command strobes are executed immediately, with the exception of the SPWD and the SXOFF strobes that are executed when CSn goes high.

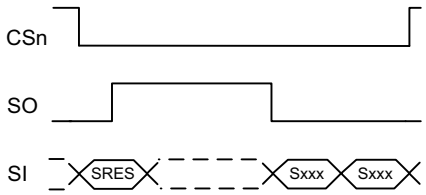


**Figure 5-5. SRES Command Strobe**

### *5.5.5 FIFO Access*

The 64-byte TX FIFO is accessed through the 0x3F addresses. When the read/write bit is zero, the TX FIFO is accessed. The TX FIFO is write-only.

The burst bit is used to determine if FIFO access is single byte or a burst access. The single byte access method expects address with burst bit set to zero and one data byte. After the data byte a new address is expected; hence, CSn can remain low. The burst access method expects one address byte and then consecutive data bytes until terminating the access by setting CSn high.

The following header bytes access the FIFO:

- 0x3F: Single byte access to TX FIFO
- 0x7F: Burst access to TX FIFO

When writing to the TX FIFO, the status byte (see *Section 5.5.1*) is output for each new data byte on SO, as shown in Figure 5-5. This status byte can be used to detect TX FIFO underflow while writing data to the TX FIFO.

**NOTE**

The status byte contains the number of bytes free before writing the byte in progress to the TX FIFO.

When the last byte that fits in the TX FIFO is transmitted to the SI pin, the status byte received concurrently on the SO pin will indicate that one byte is free in the TX FIFO.

The TX FIFO may be flushed by issuing a SFTX command strobe. The SFTX command strobe can only be issues in the IDLE or TX_UNDERFLOW states. The FIFO is cleared when going to the SLEEP state.

Figure 5-6 gives a brief overview of different register access types possible.


Copyright © 2006–2015, Texas Instruments Incorporated

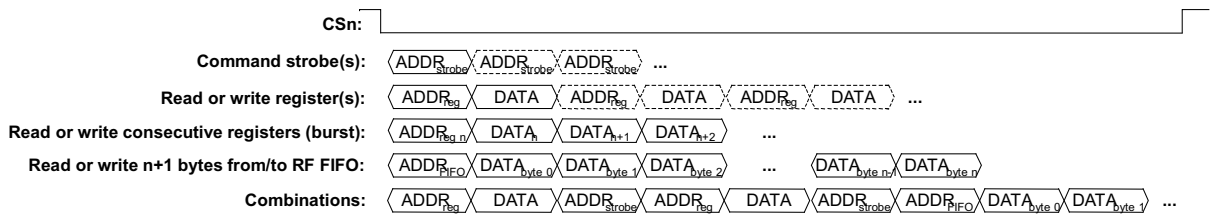


**Figure 5-6. Register Access Types**

### 5.5.6 PATABLE Access

The 0x3E address is used to access the PATABLE, which is used for selecting PA power control settings. The SPI expects up to eight data bytes after receiving the address. By programming the PATABLE, controlled PA power ramp-up and ramp-down can be achieved, as well as ASK modulation shaping for reduced bandwidth.

---

**NOTE**

The ASK modulation shaping is limited to output powers below –1 dBm. See SmartRF Studio [11] for recommended shaping sequence.

---

See also *Section 5.16* for details on output-power programming.

The PATABLE is an 8-byte table that defines the PA control settings to use for each of the eight PA power values (selected by the 3-bit value FREND0.PA_POWER). The table is written and read from the lowest setting (0) to the highest (7), one byte at a time. An index counter is used to control the access to the table. This counter is incremented each time a byte is read or written to the table, and set to the lowest index when CSn is high. When the highest value is reached the counter restarts at zero.

The access to the PATABLE is either single byte or burst access depending on the burst bit. When using burst access the index counter will count up; when reaching 7 the counter will restart at 0. The read/write bit controls whether the access is a write access (R/W=0) or a read access (R/W=1).

If one byte is written to the PATABLE and this value is to be read out then CSn must be set high before the read access in order to set the index counter back to zero.

---

**NOTE**

The content of the PATABLE is lost when entering the SLEEP state. For more information, see *DN501* [8].

---

## 5.6 Microcontroller Interface and Pin Configuration

In a typical system, CC1150 will interface to a microcontroller. This microcontroller must be able to do the following:

- Program CC1150 into different modes
- Write buffered data
- Read back status information via the 4-wire SPI-bus configuration interface (SI, SO, SCLK and CSn)

### 5.6.1 Configuration Interface

The microcontroller uses four I/O pins for the SPI configuration interface (SI, SO, SCLK and CSn). The SPI is described in *Section 5.5*.

### 5.6.2 General Control and Status Pins

The CC1150 has one dedicated configurable pin (GDO0) and one shared pin (GDO1/SO) that can output internal status information useful for control software. These pins can be used to generate interrupts on the MCU. See *Section 5.17* for more details of the signals that can be programmed. The shared pin is the SO pin in the SPI interface. The default setting for GDO1/SO is 3-state output. By selecting any other of the programming options the GDO1/SO pin will become a generic pin. When CSn is low, the pin will always function as a normal SO pin.

In the synchronous and asynchronous serial modes, the GDO0 pin is used as a serial TX data input pin while in transmit mode.

The GDO0 pin can also be used for an on-chip analog temperature sensor. By measuring the voltage on the GDO0 pin with an external ADC, the temperature can be calculated. Specifications for the temperature sensor are found in *Section 4.9*. With default PTEST register setting (0x7F), the temperature sensor output is only available when the frequency synthesizer is enabled (for example, the MANCAL, FSTXON and TX states). It is necessary to write 0xBF to the PTEST register to use the analog temperature sensor in the IDLE state. Before leaving the IDLE state, the PTEST register should be restored to its default value (0x7F).

### 5.6.3 Optional Radio Control Feature

The CC1150 has an optional way of controlling the radio by reusing SI, SCLK, and CSn from the SPI interface. This feature allows for a simple three-pin control of the major states of the radio: SLEEP, IDLE, and TX.

This optional functionality is enabled with the MCSM0.PIN_CTRL_EN configuration bit.

State changes are commanded as follows:

- If CSn is high, the SI and SCLK are set to the desired state according to Table 5-3.
- If CSn goes low, the state of SI and SCLK is latched and a command strobe is generated internally according to the pin configuration.

It is only possible to change state with the latter functionality. That means that for instance TX will not be restarted if SI and SCLK are set to TX and CSn toggles. When CSn is low the SI and SCLK has normal SPI functionality.

All pin control command strobes are executed immediately except the SPWD strobe. The SPWD strobe is delayed until CSn goes high.

**Table 5-3. Optional Pin Control Coding**

| CSn | SCLK | SI | FUNCTION |
|---|---|---|---|
| 1 | X | X | Chip unaffected by SCLK/SI |
| ↓ | 0 | 0 | Generates SPWD strobe |
| ↓ | 0 | 1 | Generates STX strobe |
| ↓ | 1 | 0 | Generates SIDLE strobe |
| ↓ | 1 | 1 | Defined on the transceiver version (CC1101) |
| 0 | SPI mode | SPI mode | SPI mode (wakes up into IDLE if in SLEEP/XOFF) |

## 5.7 Data Rate Programming

The data rate used when transmitting is programmed by the MDMCFG3.DRATE_M and the MDMCFG4.DRATE_E configuration registers. The data rate is given by the formula below. As Equation 1 shows, the programmed data rate depends on the crystal frequency.

$$R_{DATA} = \frac{(256 + DRATE_M) \times 2^{DRATE_E}}{2^{28}} \times f_{XOSC} \quad (1)$$


Copyright © 2006–2015, Texas Instruments Incorporated

The following approach shown in Equation 2 can be used to find suitable values for a given data rate.

$$DRATE_E = \left\lceil \log_2\left(\frac{R_{DATA} \times 2^{20}}{f_{XOSC}}\right)\right\rceil$$

$$DRATE_M = \frac{R_{DATA} \times 2^{28}}{f_{XOSC} \times 2^{DRATE_E}} - 256 \quad (2)$$

If DRATE_M is rounded to the nearest integer and becomes 256, increment DRATE_E and use DRATE_M=0.

The data rate can be set from 0.8 kBaud to 500 kBaud with the minimum data rate step size changes according to Table 5-4.

**Table 5-4. Data Rate Step Size**

| MIN DATA RATE [kBaud] | TYPICAL DATA RATE [kBaud] | MAX DATA RATE [kBaud] | DATA RATE STEP SIZE [kBaud] |
|---|---|---|---|
| 0.8 | 1.2 / 2.4 | 3.17 | 0.0062 |
| 3.17 | 4.8 | 6.35 | 0.0124 |
| 6.35 | 9.6 | 12.7 | 0.0248 |
| 12.7 | 19.6 | 25.4 | 0.0496 |
| 25.4 | 38.4 | 50.8 | 0.0992 |
| 50.8 | 76.8 | 101.6 | 0.1984 |
| 101.6 | 153.6 | 203.1 | 0.3967 |
| 203.1 | 250 | 406.3 | 0.7935 |
| 406.3 | 500 | 500 | 1.5869 |

## 5.8 Packet Handling Hardware Support

The CC1150 has built-in hardware support for packet oriented radio protocols.

In transmit mode, the packet handler can be configured to add the following elements to the packet stored in the TX FIFO:

- A programmable number of preamble bytes.
- A two byte Synchronization Word. Can be duplicated to give a 4-byte sync word (recommended). It is not possible to only insert preamble or only insert a sync word.
- Optionally whitening the data with a PN9 sequence.
- Optionally Interleave and Forward Error Code the data.
- Optionally compute and add a 2-byte CRC checksum over the data field.

In a system where CC1150 is used as the transmitter and CC1101 as the receiver the recommended setting is 4-byte preamble and 4-byte sync word except for 500 kBaud data rate where the recommended preamble length is 8 bytes.

**NOTE**

Register fields that control the packet handling features should only be altered when CC1150 is in the IDLE state.

### *5.8.1 Data Whitening*

From a radio perspective, the ideal over the air data are random and DC free. This results in the smoothest power distribution over the occupied bandwidth. This also gives the regulation loops in the receiver uniform operation conditions (no data dependencies).

Real world data often contain long sequences of zeros and ones. Performance can then be improved by whitening the data before transmitting, and de-whitening in the receiver. With CC1150, in combination with a CC1101 at the receiver end, this can be done automatically by setting PKTCTRL0WHITE_DATA=1. All data, except the preamble and the sync word, are then XOR-ed with a 9-bit pseudo-random (PN9) sequence before being transmitted as shown in Figure 5-7. The PN9 sequence is initialized to all ones. At the receiver end, the data are XOR-ed with the same pseudo-random sequence. This way, the whitening is reversed, and the original data appear in the receiver.

Setting PKTCTRL0.WHITE_DATA=1 is recommended for all uses, except when over-the-air compatibility with other systems is needed.

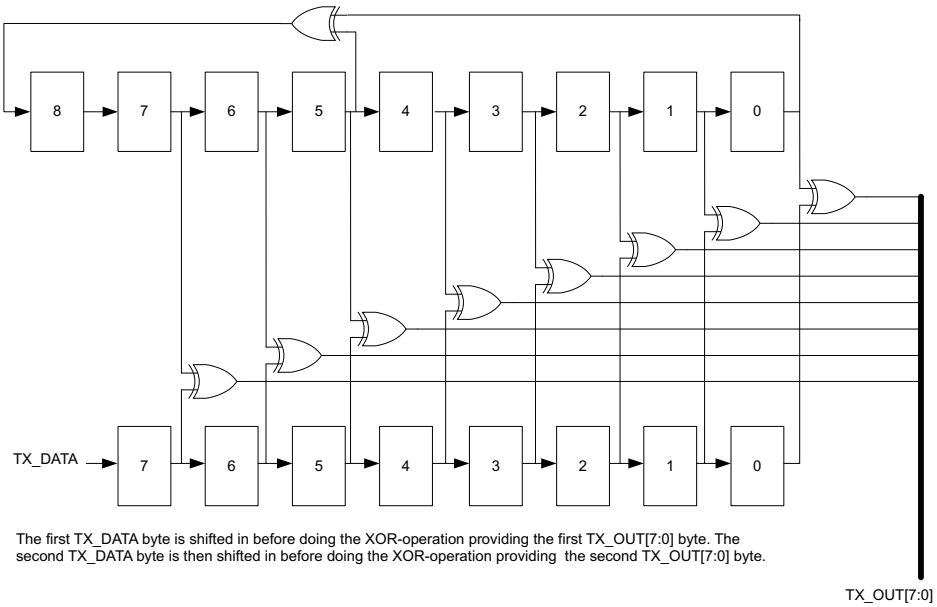


**Figure 5-7. Data Whitening in TX Mode**

### *5.8.2 Packet Format*

The format of the data packet can be configured and consists of the following items:

- Preamble
- Synchronization word
- Optional length byte
- Optional Address byte
- Payload
- Optional 2 byte CRC

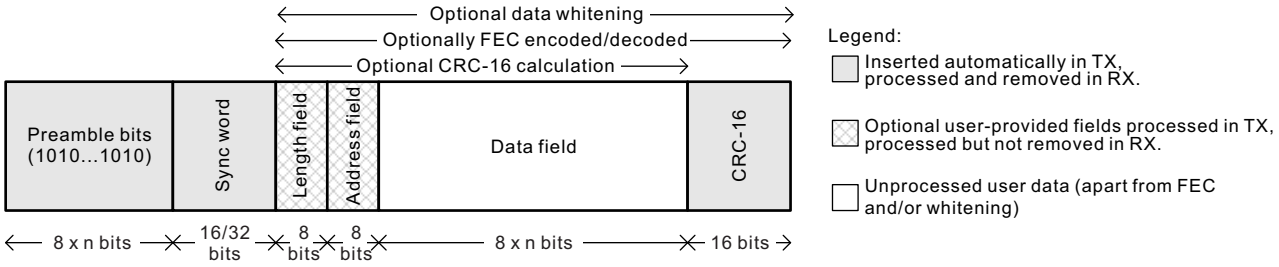


**Figure 5-8. Packet Format**


Copyright © 2006–2015, Texas Instruments Incorporated

The preamble pattern is an alternating sequence of ones and zeros (01010101…). The number of preamble bytes is programmed with the MDMCFG1.NUM_PREAMBLE value. When enabling TX, the modulator will start transmitting the preamble. When the programmed number of preamble bytes has been transmitted, the modulator will send the sync word and then data from the TX FIFO if data is available. If the TX FIFO is empty, the modulator will continue to send preamble bytes until the first byte is written to the TX FIFO. The modulator will then send the sync word and then the data bytes.

The synchronization word is a two-byte value set in the SYNC1 and SYNC0 registers. The sync word provides byte synchronization of the incoming packet. A one-byte synch word can be emulated by setting the SYNC1 value to the preamble pattern. It is also possible to emulate a 32 bit sync word by using MDMCFG2.SYNC_MODE set to 3 or 7. The sync word will then be repeated twice.

C1150 supports both fixed packet length protocols and variable packet length protocols. Variable or fixed packet length mode can be used for packets up to 255 bytes. For longer packets, infinite packet length mode must be used.

Fixed packet length mode is selected by setting PKTCTRL0.LENGTH_CONFIG=0. The desired packet length is set by the PKTLEN register. In variable packet length mode PKTCTRL0.LENGTH_CONFIG=1, the packet length is configured by the first byte after the sync word. The packet length is defined as the payload data, excluding the length byte and the optional automatic CRC.

With PKTCTRL0.LENGTH_CONFIG=2, the packet length is set to infinite and transmission will continue until turned off manually. The infinite mode can be turned off while a packet is being transmitted. As described in *Section 5.8.2.1*, this can be used to support packet formats with different length configuration than natively supported by CC1150. One should make sure that TX mode is not turned off during the transmission of the first half of any byte. Refer to the *CC1150 Errata Notes* [8] for more details.

**NOTE**

The minimum packet length supported (excluding the optional length byte and CRC) is one byte of payload data.

#### 5.8.2.1 Arbitrary Length Field Configuration

The packet automation control register, PKTCTRL0, can be reprogrammed during TX. This opens the possibility to transmit packets that are longer than 256 bytes and still be able to use the packet handling hardware support. At the start of the packet, the infinite mode (PKTCTRL0.LENGTH_CONFIG=2) must be active. The PKTLEN register is set to mod(length, 256). When less than 256 bytes remains of the packet, the MCU disables infinite packet length and activates fixed length packets. When the internal byte counter reaches the PKTLEN value, the transmission ends (the radio enters the state determined by TXOFF_MODE). Automatic CRC appending can be used (by setting PKTCTRL0.CRC_EN=1).

When, for example, a 600-byte packet is to be transmitted, the MCU should do the following (see also Figure 5-9):

- Set PKTCTRL0.LENGTH_CONFIG=2.
- Pre-program the PKTLEN register to mod(600,256)=88.
- Transmit at least 345 bytes, for example by filling the 64-byte TX FIFO six times (384 bytes transmitted).
- Set PKTCTRL0.LENGTH_CONFIG=0.
- The transmission ends when the packet counter reaches 88. A total of 600 bytes are transmitted.

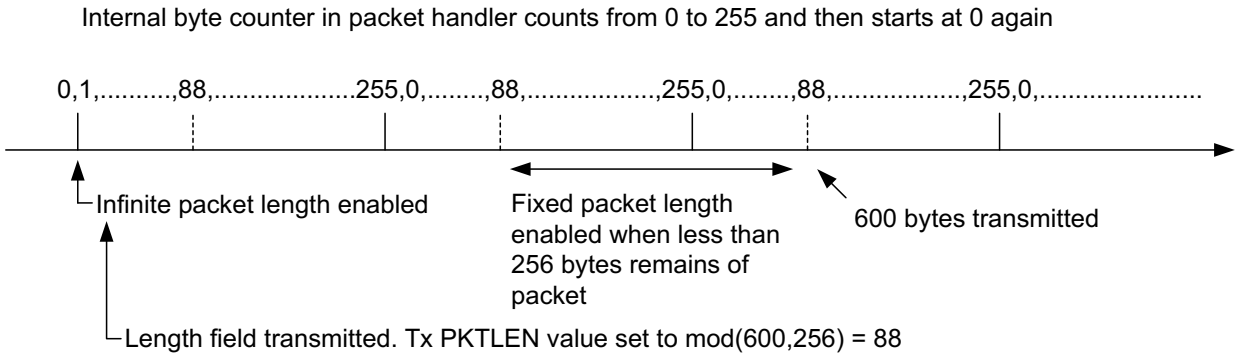


**Figure 5-9. Arbitrary Length Field Configuration**

### 5.8.3 Packet Handling in Transmit Mode

The payload that is to be transmitted must be written into the TX FIFO. The first byte written must be the length byte when variable packet length is enabled. The length byte has a value equal to the payload of the packet (including the optional address byte). If fixed packet length is enabled, then the first byte written to the TX FIFO is interpreted as the destination address, if this feature is enabled in the device that receives the packet.

The modulator will first send the programmed number of preamble bytes. If data is available in the TX FIFO, the modulator will send the two-byte (optionally 4-byte) sync word and then the payload in the TX FIFO. If CRC is enabled, the checksum is calculated over all the data pulled from the TX FIFO and the result is sent as two extra bytes at the end of the payload data. If the TX FIFO runs empty before the complete packet has been transmitted, the radio will enter TXFIFO_UNDERFLOW state. The only way to exit this state is by issuing an SFTX strobe. Writing to the TX FIFO after it has underflowed will not restart TX mode.

If whitening is enabled, the length byte, payload data and the two CRC bytes will be whitened. This is done before the optional FEC/Interleaver stage. Whitening is enabled by setting PKTCTRL0.WHITE_DATA=1.

If FEC/Interleaving is enabled, the length byte, payload data and the two CRC bytes will be scrambled by the interleaver, and FEC encoded before being modulated. FEC is enabled by setting MDMCFG1.FEC_EN=1.

### 5.8.4 Packet Handling in Firmware

When implementing a packet oriented radio protocol in firmware, the MCU needs to know when a packet has been transmitted. Additionally, for packets longer than 64 bytes, the TX FIFO needs to be refilled while in TX. This means that the MCU needs to know the number of bytes that can be written to the TX FIFO. There are two possible solutions to get the necessary status information:

a. Interrupt Driven Solution
   - The GDO pins can be used in TX to give an interrupt when a sync word has been transmitted or when a complete packet has been transmitted by setting IOCFGx.GDOx_CFG=0x06. In addition, there are two configurations for the IOCFGx.GDOx_CFG register that can be used as an interrupt source to provide information on how many bytes that is in the TX FIFO. The IOCFGx.GDOx_CFG=0x02 and the IOCFGx.GDOx_CFG=0x03 configurations are associated with the TX FIFO. See Table 5-10 for more information.

b. SPI Polling
   - The PKTSTATUS register can be polled at a given rate to get information about the current GDO2 and GDO0 values respectively. The TXBYTES register can be polled at a given rate to get information about the number of bytes in the TX FIFO. Alternatively, the number of bytes in the TX FIFO can be read from the chip status byte returned on the MISO line each time a header byte, data byte, or command strobe is sent on the SPI bus.


Copyright © 2006–2015, Texas Instruments Incorporated

– It is recommended to employ an interrupt driven solution due to that when using SPI polling, there is a small, but finite, probability that a single read from registers PKTSTATUS and TXBYTES is being corrupt. The same is the case when reading the chip status byte. This is explained in the *CC1150 Errata Notes* [8] Refer to the TI website for SW examples [12].

## 5.9 Modulation Formats

CC1150 supports amplitude, frequency and phase shift modulation formats. The desired modulation format is set in the MDMCFG2.MOD_FORMAT register.

Optionally, the data stream can be Manchester coded by the modulator. This option is enabled by setting MDMCFG2.MANCHESTER_EN=1. Manchester encoding cuts the effective data rate in half, and thus Manchester is not supported for 500 kBaud. Further note that Manchester encoding is not supported at the same time as using the FEC/Interleaver option or when using MSK modulation.

### *5.9.1 Frequency Shift Keying*

CC1150 has the possibility to use Gaussian shaped 2_FSK (GFSK). The 2-FSK signal is then shaped by a Gaussian filter with BT=1, producing a GFSK modulated signal. This spectrum-shaping feature improves adjacent channel power (ACP) and occupied bandwidth.

In “true” 2-FSK systems with abrupt frequency shifting, the spectrum is inherently broad. By making the frequency shift “softer”, the spectrum can be made significantly narrower. Thus, higher data rates can be transmitted in the same bandwidth using GFSK.

The frequency deviation is programmed with the DEVIATION_M and DEVIATION_E values in the DEVIATN register. The value has an exponent/mantissa form, and the resultant deviation is given by Equation 3.

$$f_{dev} = \frac{f_{xosc}}{2^{17}} \times (8 + \text{DEVIATION_M}) \times 2^{\text{DEVIATION_E}} \tag{3}$$

The symbol encoding is shown in Table 5-5.

**Table 5-5. Symbol Encoding for 2-FSK/GFSK Modulation**

| FORMAT | SYMBOL | CODING |
|---|---|---|
| 2-FSK/GFSK | 0 | – Deviation |
| | 1 | + Deviation |

### *5.9.2 Minimum Shift Keying*

When using MSK [(Identical to offset QPSK with half-sine shaping (data coding may differ)], the complete transmission (preamble, sync word, and payload) will be MSK modulated.

Phase shifts are performed with a constant transition time. The fraction of a symbol period used to change the phase can be modified with the DEVIATN.DEVIATION_M setting. This is equivalent to changing the shaping of the symbol.

**NOTE**

When using MSK, Manchester encoding must be disabled by setting MDMCFG2.MANCHESTER_EN=0.

The MSK modulation format implemented in CC1150 inverts the data compared to, for example, signal generators.

### 5.9.3 Amplitude Modulation

CC1150 supports two different forms of amplitude modulation: On-Off Keying (OOK) and Amplitude Shift Keying (ASK).

OOK modulation simply turns on or off the PA to modulate 1 and 0 respectively.

The ASK variant supported by the CC1150 allows programming of the modulation depth (the difference between 1 and 0), and shaping of the pulse amplitude. Pulse shaping will produce a more bandwidth constrained output spectrum.

**NOTE**

The OOK/ASK pulse shaping feature on the CC1150 does only support output power up to about –1 dBm. The DEVIATN register has no effect when using ASK/OOK.

## 5.10 Forward Error Correction with Interleaving

### 5.10.1 Forward Error Correction (FEC)

CC1150 has built in support for Forward Error Correction (FEC) that can be used with CC1101 at the receiver end. To enable this option, set MDMCFG1.FEC_EN to 1. FEC is only supported in fixed packet length mode, that is, when PKTCTRL0.LENGTH_CONFIG=0. FEC is employed on the data field and CRC word in order to reduce the gross bit error rate when operating near the sensitivity limit. Redundancy is added to the transmitted data in such a way that the receiver can restore the original data in the presence of some bit errors.

The use of FEC allows correct reception at a lower Signal-to-Noise RATIO (SNR), thus extending communication range. Alternatively, for a given SNR, using FEC decreases the bit error rate (BER). As the packet error rate (PER) is related to BER by Equation 4.

$$PER = 1 - (1 - BER)^{packet_length} \quad (4)$$

A lower BER can be used to allow longer packets, or a higher percentage of packets of a given length, to be transmitted successfully.

Finally, in realistic ISM radio environments, transient and time-varying phenomena will produce occasional errors even in otherwise good reception conditions. FEC will mask such errors and, combined with interleaving of the coded data, even correct relatively long periods of faulty reception (burst errors).

The FEC scheme adopted for CC1150 is convolutional coding, in which n bits are generated based on k input bits and the m most recent input bits, forming a code stream able to withstand a certain number of bit errors between each coding state (the m-bit window).

The convolutional coder is a rate 1/2 code with a constraint length of m = 4. The coder codes one input bit and produces two output bits; hence, the effective data rate is halved. This means that in order to transmit at the same effective data rate when using FEC, it is necessary to use twice as high over-the-air data rate.


Copyright © 2006–2015, Texas Instruments Incorporated

### 5.10.2 Interleaving

Data received through real radio channels will often experience burst errors due to interference and time-varying signal strengths. In order to increase the robustness to errors spanning multiple bits, interleaving is used when FEC is enabled. After de-interleaving, a continuous span of errors in the received stream will become single errors spread apart.

CC1150 employs matrix interleaving, which is illustrated in Figure 5-10. The on-chip interleaving buffer is a 4 × 4 matrix. In the transmitter, the data bits are written into the rows of the matrix, whereas the bit sequence to be transmitted is read from the columns of the matrix and fed to the rate ½ convolutional coder. Conversely, in a CC1101 receiver, the received symbols are written into the rows of the matrix, whereas the data passed onto the convolutional decoder is read from the columns of the matrix.

When FEC and interleaving is used, at least one extra byte is required for trellis termination. In addition, the amount of data transmitted over the air must be a multiple of the size of the interleaver buffer (two bytes). The packet control hardware therefore automatically inserts one or two extra bytes at the end of the packet, so that the total length of the data to be interleaved is an even number. Note that these extra bytes are invisible to the user, as they are removed before the received packet enters the RX FIFO in a CC1101.

When FEC and interleaving is used, the minimum data payload is 2 bytes in fixed and variable packet length mode.

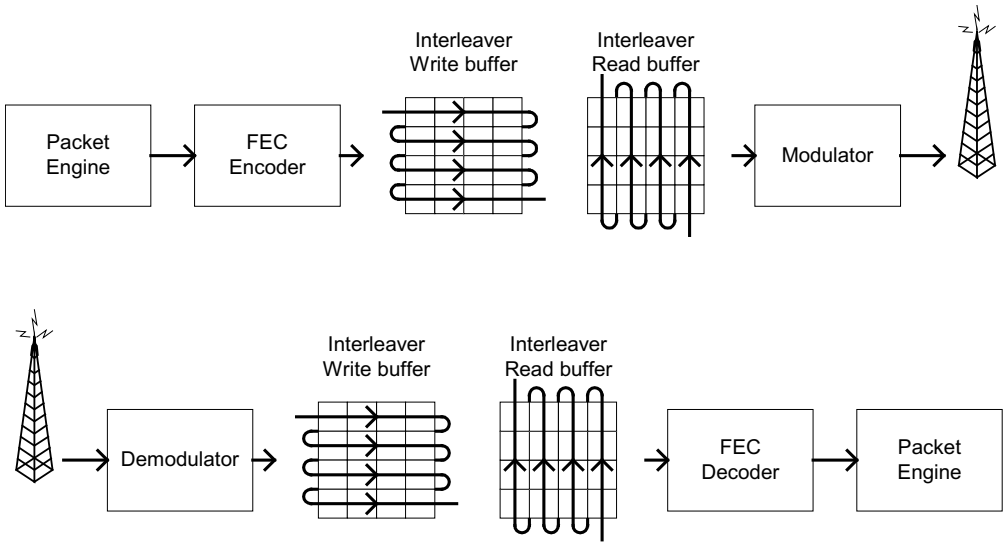


**Figure 5-10. : General Principle of Matrix Interleaving**

## 5.11 Radio Control

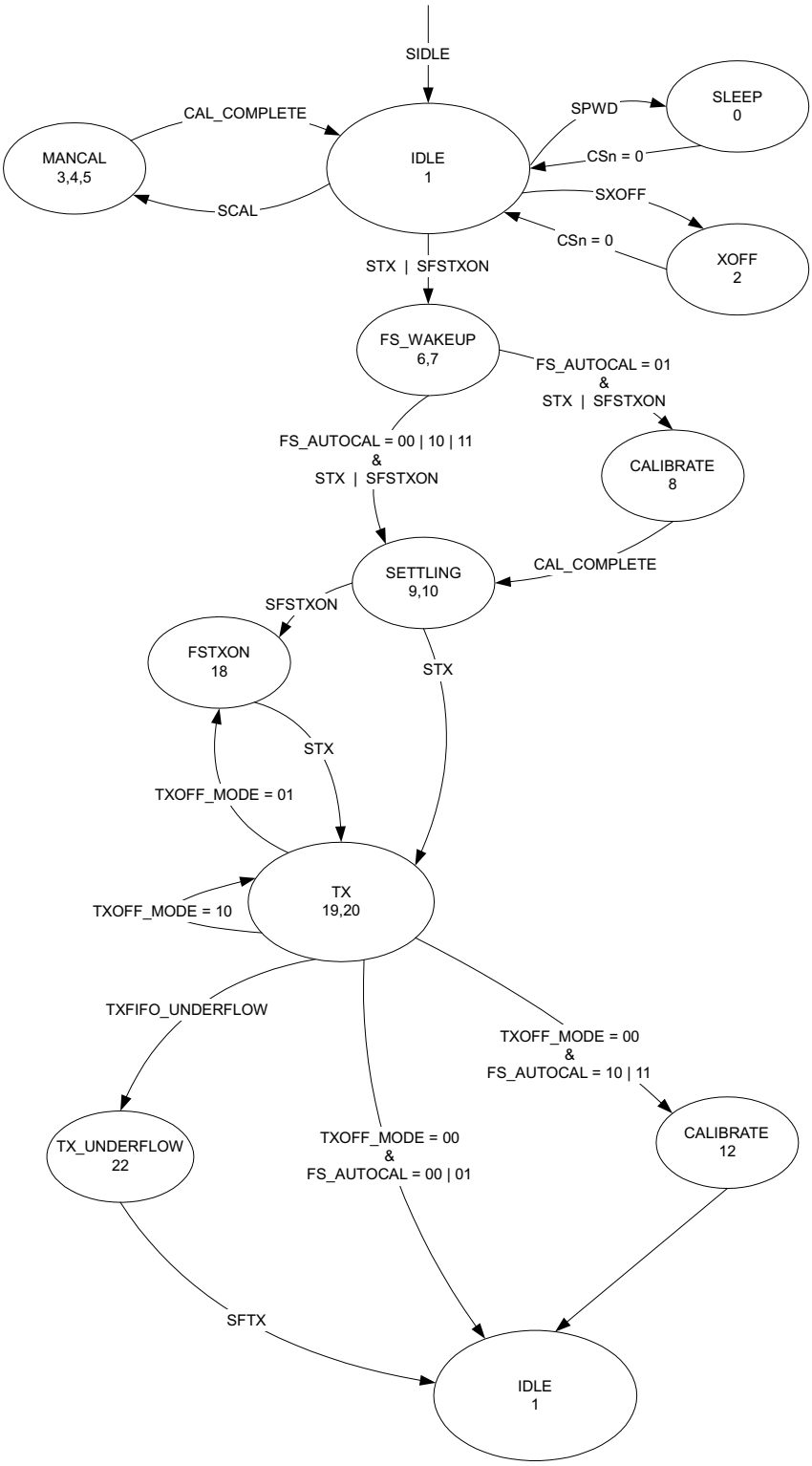


**Figure 5-11. Radio Control State Diagram**


Copyright © 2006–2015, Texas Instruments Incorporated

CC1150 has a built-in state machine that is used to switch between different operations states (modes). The change of state is done either by using command strobes or by internal events such as TX FIFO underflow.

A simplified state diagram, together with typical usage and current consumption, is shown in Figure 5-2. The complete radio control state diagram is shown in Figure 5-11. The numbers refer to the state number readable in the MARCSTATE status register. This functionality is primarily for test purposes.

### *5.11.1 Power On Start-up Sequence*

When the power supply is turned on, the system must be reset. This is achieved by one of the two sequences described in *Section 5.11.1.1* or *Section 5.11.1.2*, that is, automatic power-on reset or manual reset. After the automatic power-on reset or manual reset it is also recommended to change the signal that is output on the GDO0 pin. The default setting is to output a clock signal with a frequency of CLK_XOSC/192, but to optimize performance in TX, an alternative GDO setting should be selected from the settings found in Table 5-10.

#### 5.11.1.1 Automatic POR

A power-on reset circuit is included in the CC1150. The minimum requirements stated in Section 4.7 must be followed for the power-on reset to function properly. The internal power-up sequence is completed when CHIP_RDYn goes low. CHIP_RDYn is observed on the SO pin after CSn is pulled low. See Section 10.1 for more details on CHIP_RDYn.

When the CC1150 reset is completed the chip will be in the IDLE state and the crystal oscillator running. If the chip has had sufficient time for the crystal oscillator and voltage regulator to stabilize after the power-on-reset, the SO pin will go low immediately after taking CSn low. If CSn is taken low before reset is completed the SO pin will first go high, indicating that the crystal oscillator and voltage regulator is not stabilized, before going low as shown in Figure 5-12.

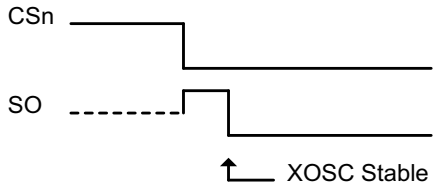


**Figure 5-12. Power-on Reset**

#### 5.11.1.2 Manual Reset

The other global reset possibility on CC1150 is the SRES command strobe. By issuing this strobe, all internal registers and states are set to the default, IDLE state. The power-up sequence is as follows (see Figure 5-13):

- Set SCLK = 1 and SI = 0.
- Strobe CSn low / high. Make sure to hold CSn high for at least 40 µs relative to pulling CSn low.
- Pull CSn low and wait for SO to go low (CHIP_RDYn).
- Issue the SRES strobe on the SI line.
- When SO goes low again, reset is complete and the chip is in the IDLE state.

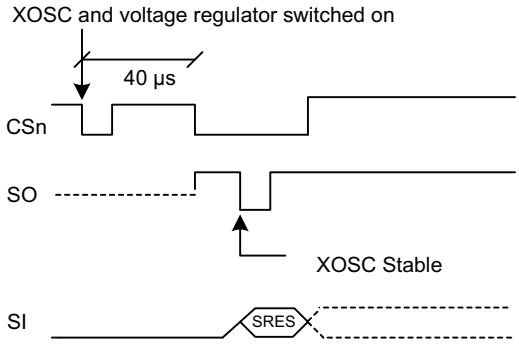


**Figure 5-13. Power-up with SRES**

**NOTE**

The above reset procedure is only required just after the power supply is first turned on. If the user wants to reset the CC1150 after this, it is only necessary to issue an SRES command strobe.

It is recommended to always send a SRES command strobe on the SPI interface after power-on even though power-on reset is used.

### 5.11.2 Crystal Control

The crystal oscillator is automatically turned on when CSn goes low. It will be turned off if the SXOFF or SPWD command strobes are issued; the state machine then goes to XOFF or SLEEP respectively. This can only be done from IDLE state. The XOSC will be turned off when CSn is released (goes high). The XOSC will be automatically turned on again when CSn goes low. The state machine will then go to the IDLE state. The SO pin on the SPI interface must be pulled low before the SPI interface is ready to be used; as described in *Section 5.5.1*.

Crystal oscillator start-up time depends on crystal ESR and load capacitances. The electrical specification for the crystal oscillator can be found in *Section 4.7*.

### 5.11.3 Voltage Regulator Control

The voltage regulator to the digital core is controlled by the radio controller. When the chip enters the SLEEP state, which is the state with the lowest current consumption, the voltage regulator is disabled. This occurs after CSn is released when a SPWD command strobe has been sent on the SPI interface. The chip is then in the SLEEP state. Setting CSn low again will turn on the regulator and crystal oscillator and make the chip enter the IDLE state.

On the CC1150, all register values (with the exception of the MCSM0.PO_TIMEOUT field) are lost in the SLEEP state. After the chip gets back to the IDLE state, the registers will have default (reset) contents and must be reprogrammed over the SPI interface.

### 5.11.4 Active Mode

The active transmit mode is activated by the MCU by using the STX command strobe.

The frequency synthesizer must be calibrated regularly. CC1150 has one manual calibration option (using the SCAL strobe), and three automatic calibration options, controlled by the MCSM0.FS_AUTOCAL setting:

- Calibrate when going from IDLE to TX (or FSTXON)
- Calibrate when going from TX to IDLE
- Calibrate every fourth time when going from TX to IDLE


Copyright © 2006–2015, Texas Instruments Incorporated

The calibration takes a constant number of XOSC cycles; see Table 5-6 for timing details. When TX is active, the chip will remain in the TX state until the current packet has been successfully transmitted. Then the state will change as indicated by the MCSM1.TXOFF_MODE setting. The possible destinations are:

- IDLE
- FSTXON: Frequency synthesizer on and ready at the TX frequency. Activate TX with STX.
- TX: Start sending preambles

The SIDLE command strobe can always be used to force the radio controller to go to the IDLE state. Note that if the radio goes from TX to IDLE by issuing an SIDLE strobe, the automatic calibration-when-going-from-TX-to-IDLE will not be performed.

### 5.11.5 Timing

The radio controller controls most timing in CC1150, such as synthesizer calibration and PLL lock. Table 5-6 shows timing in crystal clock cycles for key state transitions. Timing from IDLE to TX is constant, dependent on the auto calibration setting. The calibration time is constant 18739 clock periods. Power on time and XOSC start-up times are variable, but within the limits stated in *Section 4.7*.

**NOTE**

In a frequency hopping spread spectrum or a multi-channel protocol, the calibration time can be reduced from 721 µs to approximately 150 µs. This is explained in *Section 5.19.2*.

**Table 5-6. State Transition Timing**

| DESCRIPTION | XOSC PERIODS | 26 MHz CRYSTAL |
|---|---|---|
| Idle to TX/FSTXON, no calibration | 2298 | 88.4 µs |
| Idle to TX/FSTXON, with calibration | ≈ 21037 | 809 µs |
| TX to IDLE, no calibration | 2 | 0.1 µs |
| TX to IDLE, including calibration | ≈ 18739 | 721 µs |
| Manual calibration | ≈ 18739 | 721 µs |

## 5.12 Data FIFO

The CC1150 contains a 64 byte FIFO for data to be transmitted. The SPI interface is used for writing to the TX FIFO. Section 10.5 contains details on the SPI FIFO access. The FIFO controller will detect underflow in the TX FIFO.

When writing to the TX FIFO, it is the responsibility of the MCU to avoid TX FIFO overflow. This will not be detected by the CC1150. A TX FIFO overflow will result in an error in the TX FIFO content.

**Table 5-7. FIFO_THR Settings and the Corresponding FIFO Thresholds**

| FIFO_THR | BYTES in TX FIFO |
|---|---|
| 0000 | 61 |
| 0001 | 57 |
| 0010 | 53 |
| 0011 | 49 |
| 0100 | 45 |
| 0101 | 41 |
| 0110 | 37 |

**Table 5-7. FIFO_THR Settings and the Corresponding FIFO Thresholds (continued)**

| FIFO_THR | BYTES in TX FIFO |
|---|---|
| 0111 | 33 |
| 1000 | 29 |
| 1001 | 25 |
| 1010 | 21 |
| 1011 | 17 |
| 1100 | 13 |
| 1101 | 9 |
| 1110 | 5 |
| 1111 | 1 |

The chip status byte that is available on the SO pin while transferring the SPI address contains the fill grade of the TX FIFO. *Section 5.5.1* contains more details on this.

The number of bytes in the TX FIFO can also be read from the TXBYTES.NUM_TXBYTES status register.

The 4-bit FIFOTHR.FIFO_THR setting is used to program the FIFO threshold point. Table 5-7 lists the 16 FIFO_THR settings and the corresponding thresholds for the TX FIFO.

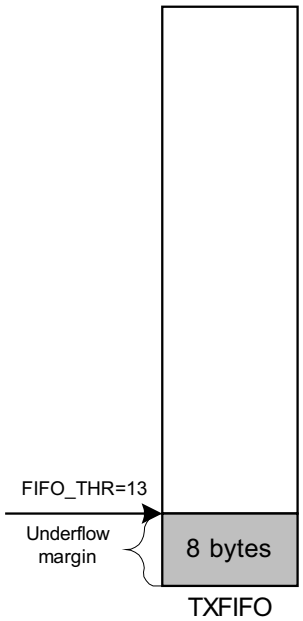


**Figure 5-14. Example of FIFO at Threshold**

A flag will assert when the number of bytes in the FIFO is equal to or higher than the programmed threshold. The flag is used to generate the FIFO status signals that can be viewed on the GDO pins (see *Section 5.17*).

Figure 5-15 shows the number of bytes in the TX FIFO when the threshold flag toggles, in the case of FIFO_THR=13. Figure 5-15 shows the flag as the FIFO is filled above the threshold, and then drained below.


Copyright © 2006–2015, Texas Instruments Incorporated

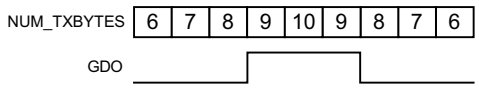


**Figure 5-15. FIFO_THR=13 versus Number of Bytes in FIFO**

## 5.13 Frequency Programming

The frequency programming in CC1150 is designed to minimize the programming needed in a channel-oriented system.

To set up a system with channel numbers, the desired channel spacing is programmed with the MDMCFG0.CHANSPC_M and MDMCFG1.CHANSPC_E registers. The channel spacing registers are mantissa and exponent respectively.

The base or start frequency is set by the 24-bit frequency word located in the FREQ2, FREQ1 and FREQ0 registers. This word will typically be set to the centre of the lowest channel frequency that is to be used.

The desired channel number is programmed with the 8-bit channel number register, CHANNR.CHAN, which is multiplied by the channel offset. The resultant carrier frequency is given by Equation 5.

$$f_{carrier} = \frac{f_{XOSC}}{2^{16}} \times \left(FREQ + CHAN \times \left((256 + CHANSPC_M) \times 2^{CHANSPC_E-2}\right)\right) \quad (5)$$

With a 26-MHz crystal, the maximum channel spacing is 405 kHz. To get, for example, 1-MHz channel spacing on solution is to use 333-kHz channel spacing and select each third channel in CHANNR.CHAN.

If any frequency programming register is altered when the frequency synthesizer is running, the synthesizer may give an undesired response. Hence, the frequency programming should only be updated when the radio is in the IDLE state.

## 5.14 VCO

The VCO is completely integrated on-chip.

### *5.14.1 VCO and PLL Self-Calibration*

The VCO characteristics will vary with temperature and supply voltage changes, as well as the desired operating frequency. In order to ensure reliable operation, CC1150 includes frequency synthesizer self-calibration circuitry. This calibration should be done regularly, and must be performed after turning on power and before using a new frequency (or channel). The number of XOSC cycles for completing the PLL calibration is given in Table 5-6.

The calibration can be initiated automatically or manually. The synthesizer can be automatically calibrated each time the synthesizer is turned on, or each time the synthesizer is turned off. This is configured with the MCSM0.FS_AUTOCAL register setting.

In manual mode, the calibration is initiated when the SCAL command strobe is activated in the IDLE mode.

The calibration values are not maintained in sleep mode. Therefore, the CC1150 must be recalibrated after reprogramming the configuration registers when the chip has been in the SLEEP state.

To check that the PLL is in lock the user can program register IOCFGx.GDOx_CFG to 0x0A and use the lock detector output available on the GDOx pin as an interrupt for the MCU (x = 0, 1, or 2). A positive transition on the GDOx pin means that the PLL is in lock. As an alternative the user can read register FSCAL1. The PLL is in lock if the register content is different from 0x3F. See more information in the *CC1150 Errata Notes* [8].

For more robust operation the source code could include a check so that the PLL is re-calibrated until PLL lock is achieved if the PLL does not lock the first time.

## 5.15 Voltage Regulators

CC1150 contains several on-chip linear voltage regulators, which generate the supply voltage needed by low-voltage modules. These voltage regulators are invisible to the user, and can be viewed as integral parts of the various modules. The user must however make sure that the absolute maximum ratings and required pin voltages in *Section 4.1* and Table 3-1 are not exceeded.

Setting the CSn pin low turns on the voltage regulator to the digital core and start the crystal oscillator. The SO pin on the SPI interface must go low before the first positive edge on the SCLK (setup time is *s* given in Table 5-1).

If the chip is programmed to enter power-down mode (SPWD strobe issued), the power will be turned off after CSn goes high. The power and crystal oscillator will be turned on again when CSn goes low.

The voltage regulator for the digital core requires one external decoupling capacitor. The voltage regulator output should only be used for driving the CC1150.

## 5.16 Output Power Programming

The RF output power level from the device has two levels of programmability, as illustrated in Figure 5-16. Firstly, the special PATABLE register can hold up to eight user selected output power settings. Secondly, the 3-bit FREND0.PA_POWER value selects the PATABLE entry to use. This two-level functionality provides flexible PA power ramp up and ramp down at the start and end of transmission, as well as ASK modulation shaping. In each case, all the PA power settings in the PATABLE from index 0 up to the FREND0.PA_POWER value are used.

The power ramping at the start and at the end of a packet can be turned off by setting FREND0.PA_POWER to zero and then programming the desired output power to index 0 in the PATABLE.

If OOK modulation is used, the logic 0 and logic 1 power levels shall be programmed to index 0 and 1 respectively.

Table 5-8 contains recommended PATABLE settings for various output levels and frequency bands. *DN012* [3] gives complete tables for the different frequency bands. Using PA settings from 0x61 to 0x6F is not recommended. Table 5-9 contains output power and current consumption for default PATABLE setting (0xC6).

PATABLE must be programmed in burst mode if you want to write to other entries than PATABLE[0]. See *Section 5.5.6* for PATABLE programming details.

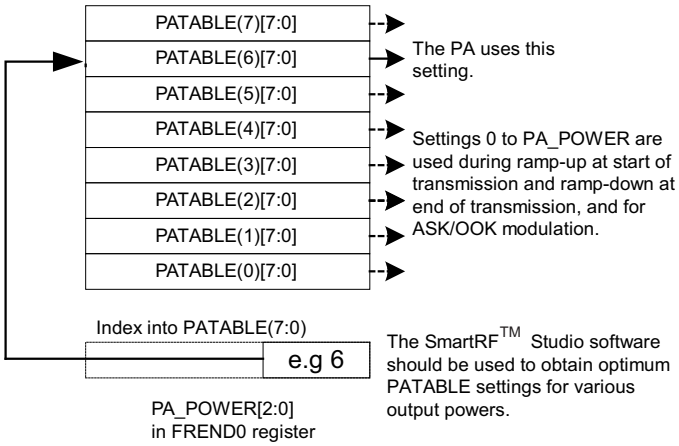


**Figure 5-16. PA_POWER and PATABLE**


Copyright © 2006–2015, Texas Instruments Incorporated

**Table 5-8. Optimum PATABLE Settings for Various Output Power Levels and Frequency Bands**

| OUTPUT POWER [dBm] | 315 MHz | | 433 MHz | | 868 MHz | | 915 MHz | |
|---|---|---|---|---|---|---|---|---|
| | SETTING | CURRENT CONSUMPTION, TYP. [mA] | SETTING | CURRENT CONSUMPTION, TYP. [mA] | SETTING | CURRENT CONSUMPTION, TYP. [mA] | SETTING | CURRENT CONSUMPTION, TYP. [mA] |
| –30 | 0x12 | 9.9 | 0x03 | 10.8 | 0x03 | 11.2 | 0x03 | 11.1 |
| –20 | 0x0E | 10.4 | 0x0E | 11.4 | 0x0C | 11.7 | 0x0F | 11.7 |
| –10 | 0x26 | 12.5 | 0x26 | 13.3 | 0x26 | 13.7 | 0x34 | 13.6 |
| –5 | 0x57 | 12.2 | 0x57 | 12.9 | 0x57 | 13.3 | 0x56 | 13.3 |
| 0 | 0x60 | 14.1 | 0x60 | 14.6 | 0x60 | 15.5 | 0x50 | 15.2 |
| 3 | 0x8B | 15.8 | 0x8A | 16.5 | 0x8A | 17.4 | 0x89 | 17.4 |
| 7 | 0xCC | 21.4 | 0xC8 | 23 | 0xCC | 24.4 | 0xC8 | 24.6 |
| 10 | 0xC4 | 25.6 | 0xC2 | 26.1 | 0xC3 | 29.3 | 0xC0 | 29.3 |

**Table 5-9. Output Power and Current Consumption for Default PATABLE Setting**

| DEFAULT POWER SETTING | 315 MHz | | 433 MHz | | 868 MHz | | 915 MHz | |
|---|---|---|---|---|---|---|---|---|
| | OUTPUT POWER [dBm] | CURRENT CONSUMPTION, TYP. [mA] | OUTPUT POWER [dBm] | CURRENT CONSUMPTION, TYP. [mA] | OUTPUT POWER [dBm] | CURRENT CONSUMPTION, TYP. [mA] | OUTPUT POWER [dBm] | CURRENT CONSUMPTION, TYP. [mA] |
| 0xC6 | 9.3 | 24.4 | 8.1 | 23.9 | 8.9 | 27.3 | 7.7 | 25.5 |

### *5.16.1 Shaping and PA Ramping*

With ASK modulation, up to eight power settings are used for shaping. The modulator contains a counter that counts up when transmitting a one and down when transmitting a zero. The counter counts at a rate equal to 8 times the symbol rate. The counter saturates at FREND0.PA_POWER and 0 respectively. This counter value is used as an index for a lookup in the power table. Thus, in order to utilize the whole table, FREND0.PA_POWER should be 7 when ASK is active. The shaping of the ASK signal is dependent on the configuration of the PATABLE. Figure 5-17 shows some examples of ASK shaping.

**NOTE**

The OOK/ASK pulse shaping feature on the CC1150 is only supported for output power levels below –1 dBm.

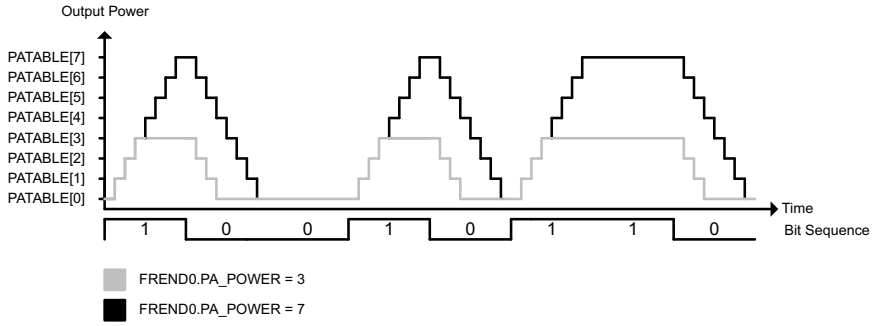


**Figure 5-17. Shaping of ASK Signal**

## 5.17 General Purpose and Test Output Control Pins

The two digital output pins GDO0 and GDO1 are general control pins. Their functions are programmed by IOCFG0.GDO0_CFG and IOCFG1.GDO1_CFG respectively. Table 5-10 shows the different signals that can be monitored on the GDO pins. These signals can be used as an interrupt to the MCU.

GDO1 is the same pin as the SO pin on the SPI interface, thus the output programmed on this pin will only be valid when CSn is high. The default value for GDO1 is 3-stated, which is useful when the SPI interface is shared with other devices.

The default value for GDO0 is a 125 to 146 kHz clock output (XOSC frequency divided by 192). Because the XOSC is turned on at power-on-reset, this can be used to clock the MCU in systems with only one crystal. When the MCU is up and running it can change the clock frequency by writing to IOCFG0.GDO0_CFG.

An on-chip analog temperature sensor is enabled by writing the value 128 (0x80h) to the IOCFG0.GDO0_CFG register. The voltage on the GDO0 pin is then proportional to temperature. See *Section 4.9* for temperature sensor specifications.

**Table 5-10. GDO signal selection(x = 0 or 1)**

| GDOx_CFG[5:0] | DESCRIPTION |
|---|---|
| 0 (0x00) | Reserved – defined on the transceiver version (CC1101). |
| 1 (0x01) | Reserved – defined on the transceiver version (CC1101). |
| 2 (0x02) | Associated to the TX FIFO: Asserts when the TX FIFO is filled at or above the TX FIFO threshold. De-asserts when the TX FIFO is below the same threshold. |
| 3 (0x03) | Associated to the TX FIFO: Asserts when TX FIFO is full. De-asserts when the TX FIFO is drained below the TX FIFO threshold. |
| 4 (0x04) | Reserved – defined on the transceiver version (CC1101). |
| 5 (0x05) | Asserts when the TX FIFO has underflowed. De-asserts when the FIFO is flushed. |
| 6 (0x06) | Asserts when sync word has been sent, and de-asserts at the end of the packet. In TX the pin will also de-assert if the TX FIFO underflows. |
| 7 (0x07) | Reserved – defined on the transceiver version (CC1101). |
| 8 (0x08) | Reserved – defined on the transceiver version (CC1101). |
| 9 (0x09) | Reserved – defined on the transceiver version (CC1101). |
| 10 (0x0A) | Lock detector output. The PLL is in lock if the lock detector output has a positive transition or is constantly logic high. To check for PLL lock the lock detector output should be used as an interrupt for the MCU. |
| 11 (0x0B) | Serial Clock. Synchronous to the data in synchronous serial mode.<br>In TX mode, data is sampled by CC1150 on the rising edge of the serial clock when GDOx_INV=0. |
| 12 (0x0C) | Reserved – defined on the transceiver version (CC1101). |
| 13 (0x0D) | Reserved – defined on the transceiver version (CC1101). |
| 14 (0x0E) | Reserved – defined on the transceiver version (CC1101). |
| 15 (0x0F) | Reserved – defined on the transceiver version (CC1101). |
| 16 (0x10) | Reserved – used for test. |
| 17 (0x11) | Reserved – used for test. |
| 18 (0x12) | Reserved – used for test. |
| 19 (0x13) | Reserved – used for test. |
| 20 (0x14) | Reserved – used for test. |
| 21 (0x15) | Reserved – used for test. |
| 22 (0x16) | Reserved – defined on the transceiver version (CC1101). |
| 23 (0x17) | Reserved – defined on the transceiver version (CC1101). |
| 24 (0x18) | Reserved – used for test. |
| 25 (0x19) | Reserved – used for test. |
| 26 (0x1A) | Reserved – used for test. |
| 27 (0x1B) | PA_PD. PA is enabled when 1, in power-down when 0. |
| 28 (0x1C) | Reserved – defined on the transceiver version (CC1101). |
| 29 (0x1D) | Reserved – defined on the transceiver version (CC1101). |
| 30 (0x1E) | Reserved – used for test. |
| 31 (0x1F) | Reserved – used for test. |
| 32 (0x20) | Reserved – used for test. |
| 33 (0x21) | Reserved – used for test. |
| 34 (0x22) | Reserved – used for test. |
| 35 (0x23) | Reserved – used for test. |


Copyright © 2006–2015, Texas Instruments Incorporated

**Table 5-10. GDO signal selection(x = 0 or 1) (continued)**

| GDOx_CFG[5:0] | DESCRIPTION | |
|---|---|---|
| 36 (0x24) | Reserved – defined on the transceiver version (CC1101). | |
| 37 (0x25) | Reserved – defined on the transceiver version (CC1101). | |
| 38 (0x26) | Reserved – used for test. | |
| 39 (0x27) | Reserved – defined on the transceiver version (CC1101). | |
| 40 (0x28) | Reserved – used for test. | |
| 41 (0x29) | CHIP_RDYn | |
| 42 (0x2A) | Reserved – used for test. | |
| 43 (0x2B) | XOSC_STABLE | |
| 44 (0x2C) | Reserved – used for test. | |
| 45 (0x2D) | GDO0_Z_EN_N. When this output is 0, GDO0 is configured as input (for serial TX data). | |
| 46 (0x2E) | High impedance (3-state) | |
| 47 (0x2F) | HW to 0 (HW1 achieved by setting GDOx_INV=1) | |
| 48 (0x30) | CLK_XOSC/1 | See (1)(2) |
| 49 (0x31) | CLK_XOSC/1.5 | |
| 50 (0x32) | CLK_XOSC/2 | |
| 51 (0x33) | CLK_XOSC/3 | |
| 52 (0x34) | CLK_XOSC/4 | |
| 53 (0x35) | CLK_XOSC/6 | |
| 54 (0x36) | CLK_XOSC/8 | |
| 55 (0x37) | CLK_XOSC/12 | |
| 56 (0x38) | CLK_XOSC/16 | |
| 57 (0x39) | CLK_XOSC/24 | |
| 58 (0x3A) | CLK_XOSC/32 | |
| 59 (0x3B) | CLK_XOSC/48 | |
| 60 (0x3C) | CLK_XOSC/64 | |
| 61 (0x3D) | CLK_XOSC/96 | |
| 62 (0x3E) | CLK_XOSC/128 | |
| 63 (0x3F) | CLK_XOSC/192 | |

(1) There are 2 GDO pins, but only one CLK_XOSC/n can be selected as an output at any time. If CLK_XOSC/n is to be monitored on one of the GDO pins, the other GDO pin must be configured to values less than 0x30. The GDO0 default value is CLK_XOSC/192.
(2) To optimize RF performance, these signals should not be used while the radio is in TX mode.

## 5.18 Asynchronous and Synchronous Serial Operation

Several features and modes of operation have been included in the CC1150 to provide backward compatibility with previous TI products and other existing RF communication systems. For new systems, it is recommended to use the built-in packet handling features, as they can give more robust communication, significantly offload the microcontroller and simplify software development.

### *5.18.1 Asynchronous Serial Operation*

For backward compatibility with systems already using the asynchronous data transfer from other TI products, asynchronous transfer is also included in CC1150.

When asynchronous transfer is enabled, several of the support mechanisms for the MCU that are included in CC1150 will be disabled, such as packet handling hardware, buffering in the FIFO and so on. The asynchronous transfer mode does not allow the use of the data whitener, interleaver and FEC, and it is not possible to use Manchester encoding. MSK is not supported for asynchronous transfer.

Setting PKTCTRL0.PKT_FORMAT to 3 enables asynchronous transparent (serial) mode. In TX, the GDO0 pin is used for data input (TX data).

The MCU must control start and stop of transmit with the STX and SIDLE strobes.

The CC1150 modulator samples the level of the asynchronous input 8 times faster than the programmed data rate. The timing requirement for the asynchronous stream is that the error in the bit period must be less than one eighth of the programmed data rate.

### 5.18.2 Synchronous Serial Operation

Setting PKTCTRL0.PKT_FORMAT to 1 enables synchronous serial operation mode. In this operational mode the data must be NRZ encoded (MDMCFG2.MANCHESTER_EN=0). In synchronous serial operation mode, data is transferred on a two wire serial interface. The CC1150 provides a clock that is used to set up new data on the data input line. Data input (TX data) is the GDO0 pin. This pin will automatically be configured as an input when TX is active. The TX latency is 8 bits.

Preamble and sync word insertion may or may not be active, dependent on the sync mode set by the MDMCFG3.SYNC_MODE.

If preamble and sync word is disabled, all other packet handler features and FEC should also be disabled. The MCU must then handle preamble and sync word insertion in software.

If preamble and sync word insertion is left on, all packet handling features and FEC can be used. When using the packet handling features synchronous serial mode, the CC1150 will insert the preamble and sync word and the MCU will only provide the data payload. This is equivalent to the recommended FIFO operation mode.

## 5.19 System Considerations and Guidelines

### 5.19.1 SRD Regulations

International regulations and national laws regulate the use of radio receivers and transmitters. Short Range Devices (SRDs) for license free operation below 1 GHz are usually operated in the 315-MHz, 433-MHz, 868-MHz or 915-MHz frequency bands. The CC1150 is specifically designed for such use with its 300 to 348 MHz, 400 to 464 MHz and 800 to 928 MHz operating ranges. The most important regulations when using the CC1150 in the 315-MHz, 433-MHz, 868-MHz or 915-MHz frequency bands are EN 300 220 (Europe) and FCC CFR47 part 15 (USA). A summary of the most important aspects of these regulations can be found in *AN001 SRD Regulations for Licence Free Transceiver Operation* (SWRA090).

**NOTE**

Compliance with regulations is dependent on complete system performance. It is the end-product manufactor's responsibility to ensure that the system complies with regulations.

### 5.19.2 Frequency Hopping and Multi-Channel Systems

The 315-MHz, 433-MHz, 868-MHz or 915-MHz bands are shared by many systems both in industrial, office and home environments. It is therefore recommended to use frequency hopping spread spectrum (FHSS) or a multi-channel protocol because the frequency diversity makes the system more robust with respect to interference from other systems operating in the same frequency band. FHSS also combats multipath fading.

CC1150 is highly suited for FHSS or multi-channel systems due to its agile frequency synthesizer and effective communication interface. Using the packet handling support and data buffering is also beneficial in such systems as these features will significantly offload the host controller.

Charge pump current, VCO current and VCO capacitance array calibration data is required for each frequency when implementing frequency hopping for CC1150. There are 3 ways of obtaining the calibration data from the chip:

1. Frequency hopping with calibration for each hop. The PLL calibration time is approximately 720 µs. The blanking interval between each frequency hop is then approximately 810 µs.


Copyright © 2006–2015, Texas Instruments Incorporated

2. Fast frequency hopping without calibration for each hop can be done by calibrating each frequency at startup and saving the resulting FSCAL3, FSCAL2 and FSCAL1 register values in MCU memory. The VCO capacitance calibration FSCAL1 register value must be found for each RF frequency to be used. The VCO current calibration value and the charge pump current calibration value available in FSCAL2 and FSCAL3 respectively are not dependent on the RF frequency, so the same value can therefore be used for all RF frequencies for these two registers. Between each frequency hop, the calibration process can then be replaced by writing the FSCAL3, FSCAL2 and FSCAL1 register values that corresponds to the next RF frequency. The PLL turn on time is approximately 90 µs. The blanking interval between each frequency hop is then approximately 90 µs.
3. Run calibration on a single frequency at startup. Next write 0 to FSCAL3[5:4] to disable the charge pump calibration. After writing to FSCAL3[5:4], strobe STX with MCSM0.FS_AUTOCAL=1 for each new frequency hop. That is, VCO current and VCO capacitance calibration is done, but not charge pump current calibration. When charge pump current calibration is disabled the calibration time is reduced from approximately 720 µs to approximately 150 µs. The blanking interval between each frequency hop is then approximately 240 µs.

There is a trade off between blanking time and memory space needed for storing calibration data in non-volatile memory. Solution (2) above gives the shortest blanking interval, but requires more memory space to store calibration values. This solution also requires that the supply voltage and temperature do not vary much in order to have a robust solution. Solution (3) gives approximately 570 µs smaller blanking interval than solution (1).

The recommended settings for TEST0.VCO_SEL_CAL_EN change with frequency. This means that one should always use SmartRF Studio [11] to get the correct settings for a specific frequency before doing a calibration, regardless of which calibration method is being used. It must be noted that the content of the CC1150 is not retained in SLEEP state, and thus it is necessary to write to the TEST0 register, along with other registers, when returning from the SLEEP state and initiating calibrations.

### 5.19.3 Wideband Modulation Not Using Spread Spectrum

Digital modulation systems under FFC part 15.247 include FSK and GFSK modulation. A maximum peak output power of 1W (+30 dBm) is allowed if the 6 dB bandwidth of the modulated signal exceeds 500 kHz. In addition, the peak power spectral density conducted to the antenna shall not be greater than +8 dBm in any 3 kHz band.

Operating at high data rates and frequency deviation the CC1150 is suited for systems targeting compliance with digital modulation system as defined by FFC part 15.247. An external power amplifier is needed to increase the output above +10 dBm. Please refer to *DN006* [5] for further details concerning wideband modulation and CC1150.

### 5.19.4 Data Burst Transmissions

The high maximum data rate of CC1150 opens up for burst transmissions. A low average data rate link (for example, 10 kBaud), can be realized using a higher over-the-air data rate. Buffering the data and transmitting in bursts at high data rate (for example, 500 kBaud) will reduce the time in active mode, and hence also reduce the average current consumption significantly. Reducing the time in active mode will reduce the likelihood of collisions with other systems in the same frequency range.

### 5.19.5 Continuous Transmissions

In data streaming applications the CC1150 opens up for continuous transmissions at 500 kBaud effective data rate. As the modulation is done with a closed loop PLL, there is no limitation in the length of a transmission (open loop modulation used in some transceivers often prevents this kind of continuous data streaming and reduces the effective data rate).

### 5.19.6 Low-Cost Systems

As the CC1150 provides 500-kBaud multi-channel performance without any external filters, a very low cost system can be made. A HC-49 type SMD crystal is used in the CC1150EM reference design (see [1] and [2]).

**NOTE**

The crystal package strongly influences the price. In a size constrained PCB design a smaller, but more expensive, crystal may be used.

### 5.19.7 Battery-Operated Systems

In low power applications, the SLEEP state should be used when the CC1150 is not active.

### 5.19.8 Increasing Output Power

In some applications it may be necessary to extend the link range. Adding an external power amplifier is the most effective way of doing this.

The power amplifier should be inserted between the antenna and the balun as shown in Figure 5-18.

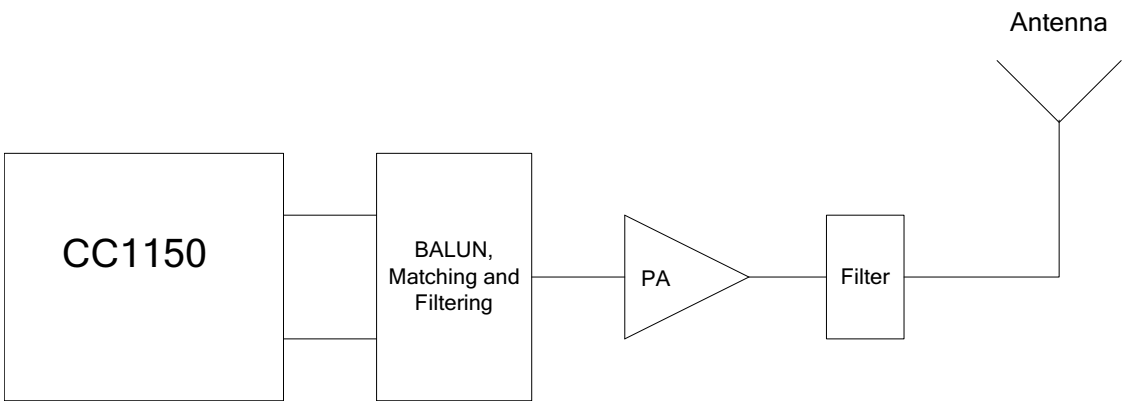


**Figure 5-18. Block Diagram of CC1150 Usage with External Power Amplifier**

## 5.20 Memory

The configuration of CC1150 is done by programming 8-bit registers. The configuration data based on selected system parameters are most easily found by using the SmartRF Studio [11] software. Complete descriptions of the registers are given in *Section 5.20.1*. After chip reset, all the registers have default values as shown in the tables. The optimum register setting might differ from the default value. After a reset, all registers that shall be different from the default value therefore needs to be programmed through the SPI interface.

There are 9 Command Strobe Registers, listed in Table 5-11 Accessing these registers will initiate the change of an internal state or mode. There are 29 normal 8-bit Configuration Registers, listed in Table 5-12. Many of these registers are for test purposes only, and need not be written for normal operation of CC1150.

There are also 6 Status registers, which are listed in Table 5-13. These registers, which are read-only, contain information about the status of CC1150.

The TX FIFO is accessed through one 8-bit register. Only write operations are allowed to the TX FIFO.

During the address transfer and while writing to a register or the TX FIFO, a status byte is returned. This status byte is described in Table 5-2.


Copyright © 2006–2015, Texas Instruments Incorporated

Figure 5-19 summarizes the SPI address space. Registers that are only defined on the CC1101 transceiver are also listed. CC1101 and CC1150 are register compatible, but registers and fields only implemented in the transceiver always contain 0 in CC1150.

The address to use is given by adding the base address to the left and the burst and read/write bits on the top. Note that the burst bit has different meaning for base addresses above and below 0x2F.

**Table 5-11. Command Strobes**

| ADDRESS | STROBE NAME | DESCRIPTION |
|---|---|---|
| 0x30 | SRES | Reset chip. |
| 0x31 | SFSTXON | Enable and calibrate frequency synthesizer (if MCSM0.FS_AUTOCAL=1). |
| 0x32 | SXOFF | Turn off crystal oscillator. |
| 0x33 | SCAL | Calibrate frequency synthesizer and turn it off (enables quick start). SCAL can be strobed in IDLE state without setting manual calibration mode (MCSM0.FS_AUTOCAL=0) |
| 0x35 | STX | Enable TX. Perform calibration first if MCSM0.FS_AUTOCAL=1. |
| 0x36 | SIDLE | Exit TX and turn off frequency synthesizer. |
| 0x39 | SPWD | Enter power down mode when CSn goes high. |
| 0x3B | SFTX | Flush the TX FIFO buffer. |
| 0x3D | SNOP | No operation. May be used to pad strobe commands to two bytes for simpler software. |

**Table 5-12. Configuration Registers Overview**

| ADDRESS | ACRONYM | REGISTER NAME | SECTION |
|---|---|---|---|
| 0x01 | IOCFG1 | GDO1 output pin configuration | *Table 5-14* |
| 0x02 | IOCFG0 | GDO0 output pin configuration | *Table 5-15* |
| 0x03 | FIFOTHR | FIFO threshold | *Table 5-16* |
| 0x04 | SYNC1 | Sync word, high byte | *Table 5-17* |
| 0x05 | SYNC0 | Sync word, low byte | *Table 5-18* |
| 0x06 | PKTLEN | Packet length | *Table 5-19* |
| 0x08 | PKTCTRL0 | Packet automation control | *Table 5-20* |
| 0x09 | ADDR | Device address | *Table 5-21* |
| 0x0A | CHANNR | Channel number | *Table 5-22* |
| 0x0D | FREQ2 | Frequency control word, high byte | *Table 5-23* |
| 0x0E | FREQ1 | Frequency control word, middle byte | *Table 5-24* |
| 0x0F | FREQ0 | Frequency control word, low byte | *Table 5-25* |
| 0x10 | MDMCFG4 | Modulator configuration | *Table 5-26* |
| 0x11 | MDMCFG3 | Modulator configuration | *Table 5-27* |
| 0x12 | MDMCFG2 | Modulator configuration | *Table 5-28* |
| 0x13 | MDMCFG1 | Modulator configuration | *Table 5-29* |
| 0x14 | MDMCFG0 | Modulator configuration | *Table 5-30* |
| 0x15 | DEVIATN | Modulator deviation setting | *Table 5-31* |
| 0x17 | MCSM1 | Main Radio Control State Machine configuration | *Table 5-32* |
| 0x18 | MCSM0 | Main Radio Control State Machine configuration | *Table 5-33* |

Copyright © 2006–2015, Texas Instruments Incorporated

### Table 5-12. Configuration Registers Overview (continued)

| ADDRESS | ACRONYM | REGISTER NAME | SECTION |
|---|---|---|---|
| 0x22 | FREND0 | Front end TX configuration | *Table 5-34* |
| 0x23 | FSCAL3 | Frequency synthesizer calibration | *Table 5-35* |
| 0x24 | FSCAL2 | Frequency synthesizer calibration | *Table 5-36* |
| 0x25 | FSCAL1 | Frequency synthesizer calibration | *Table 5-37* |
| 0x26 | FSCAL0 | Frequency synthesizer calibration | *Table 5-38* |
| 0x29 | FSTEST | Frequency synthesizer calibration control | *Table 5-39* |
| 0x2A | PTEST | Production test | *Table 5-40* |
| 0x2C | TEST2 | Various test settings | *Table 5-41* |
| 0x2D | TEST1 | Various test settings | *Table 5-42* |
| 0x2E | TEST0 | Various test settings | *Table 5-43* |

### Table 5-13. Status Registers Overview

| ADDRESS | ACRONYM | REGISTER NAME | SECTION |
|---|---|---|---|
| 0x30 (0xF0) | PARTNUM | Part number for CC1150 | *Table 5-44* |
| 0x31 (0xF1) | VERSION | Current version number | *Table 5-45* |
| 0x35 (0xF5) | MARCSTATE | Control state machine state | *Table 5-46* |
| 0x38 (0xF8) | PKTSTATUS | Current GDOx status and packet status | *Table 5-47* |
| 0x39 (0xF9) | VCO_VC_DAC | Current setting from PLL calibration module | *Table 5-48* |
| 0x3A (0xFA) | TXBYTES | Underflow and number of bytes in the TX FIFO | *Table 5-49* |


Copyright © 2006–2015, Texas Instruments Incorporated

| | Write | | Read | | |
|---|---|---|---|---|---|
| | Single byte | Burst | Single byte | Burst | |
| | +0x00 | +0x40 | +0x80 | +0xC0 | |
| 0x00 | IOCFG2 | | | | R/W configuration registers, burst access possible |
| 0x01 | IOCFG1 | | | | |
| 0x02 | IOCFG0 | | | | |
| 0x03 | FIFOTHR | | | | |
| 0x04 | SYNC1 | | | | |
| 0x05 | SYNC0 | | | | |
| 0x06 | PKTLEN | | | | |
| 0x07 | PKTCTRL1 | | | | |
| 0x08 | PKTCTRL0 | | | | |
| 0x09 | ADDR | | | | |
| 0x0A | CHANNR | | | | |
| 0x0B | FSCTRL1 | | | | |
| 0x0C | FSCTRL0 | | | | |
| 0x0D | FREQ2 | | | | |
| 0x0E | FREQ1 | | | | |
| 0x0F | FREQ0 | | | | |
| 0x10 | MDMCFG4 | | | | |
| 0x11 | MDMCFG3 | | | | |
| 0x12 | MDMCFG2 | | | | |
| 0x13 | MDMCFG1 | | | | |
| 0x14 | MDMCFG0 | | | | |
| 0x15 | DEVIATN | | | | |
| 0x16 | MCSM2 | | | | |
| 0x17 | MCSM1 | | | | |
| 0x18 | MCSM0 | | | | |
| 0x19 | FOCCFG | | | | |
| 0x1A | BSCFG | | | | |
| 0x1B | AGCCTRL2 | | | | |
| 0x1C | AGCCTRL1 | | | | |
| 0x1D | AGCCTRL0 | | | | |
| 0x1E | WOREVT1 | | | | |
| 0x1F | WOREVT0 | | | | |
| 0x20 | WORCTRL | | | | |
| 0x21 | FREND1 | | | | |
| 0x22 | FREND0 | | | | |
| 0x23 | FSCAL3 | | | | |
| 0x24 | FSCAL2 | | | | |
| 0x25 | FSCAL1 | | | | |
| 0x26 | FSCAL0 | | | | |
| 0x27 | RCCTRL1 | | | | |
| 0x28 | RCCTRL0 | | | | |
| 0x29 | FSTEST | | | | |
| 0x2A | PTEST | | | | |
| 0x2B | AGCTEST | | | | |
| 0x2C | TEST2 | | | | |
| 0x2D | TEST1 | | | | |
| 0x2E | TEST0 | | | | |
| 0x2F | | | | | |
| 0x30 | SRES | | SRES | PARTNUM | Command Strobes, Status registers (read only) and multi byte registers |
| 0x31 | SFSTXON | | SFSTXON | VERSION | |
| 0x32 | SXOFF | | SXOFF | FREQEST | |
| 0x33 | SCAL | | SCAL | LQI | |
| 0x34 | SRX | | SRX | RSSI | |
| 0x35 | STX | | STX | MARCSTATE | |
| 0x36 | SIDLE | | SIDLE | WORTIME1 | |
| 0x37 | SAFC | | SAFC | WORTIME0 | |
| 0x38 | SWOR | | SWOR | PKTSTATUS | |
| 0x39 | SPWD | | SPWD | VCO_VC_DAC | |
| 0x3A | SFRX | | SFRX | TXBYTES | |
| 0x3B | SFTX | | SFTX | RXBYTES | |
| 0x3C | SWORRST | | SWORRST | | |
| 0x3D | SNOP | | SNOP | | |
| 0x3E | PATABLE | PATABLE | PATABLE | PATABLE | |
| 0x3F | TX FIFO | TX FIFO | RX FIFO | RX FIFO | |

Greyed text: not implemented on CC1150 thus only valid for the transceiver version (CC1101)

**Figure 5-19. SPI Address Space**

### 5.20.1 Configuration Register Details

**Table 5-14. 0x01: IOCFG1 – GDO1 Output Pin configuration**

| BIT | FIELD | TYPE | RESET | DESCRIPTION |
|---|---|---|---|---|
| 7 | GDO_DS | R/W | 0x0 | Set high (1) or low (0) output drive strength on the GDO pins. |
| 6 | GDO1_INV | R/W | 0x0 | Invert output, that is, select active low (1) / high (0). |
| 5:0 | GDO1_CFG[5:0] | R/W | 0x2E | Default is tri-state (See Table 5-10). |

**Table 5-15. 0x02: IOCFG0 – GDO0 Output Pin Configuration**

| BIT | FIELD | TYPE | RESET | DESCRIPTION |
|---|---|---|---|---|
| 7 | TEMP_SENSOR_ENABLE | R/W | 0x0 | Enable analog temperature sensor. Write 0 in all other register bits when using temperature sensor. |
| 6 | GDO0_INV | R/W | 0x0 | Invert output, that is, select active low (1) / high (0). |
| 5:0 | GDO0_CFG[5:0] | R/W | 0x3F | Default is CLK_XOSC/192 (See Table 5-10).<br>It is recommended to disable the clock output during initialization in order to optimize RF performance. |

**Table 5-16. 0x03: FIFOTHR – FIFO Threshold**

| BIT | FIELD | TYPE | RESET | DESCRIPTION |
|---|---|---|---|---|
| 7:4 | Reserved | R/W | 0x0 | Write 0 for compatibility with possible future extensions. |
| 3:0 | FIFO_THR[3:0] | R/W | 0x07 | Set the threshold for the TX FIFO. The threshold is exceeded when the number of bytes in the FIFO is equal to or higher than the threshold value.<br>The binary number is the setting and the result (Bytes in TX FIFO) is the next state after finishing packet transmission.<br>0000 = 61<br>0001 = 57<br>0010 = 53<br>0011 = 49<br>0100 = 45<br>0101 = 41<br>0110 = 37<br>0111 = 33<br>1000 = 29<br>1001 = 25<br>1010 = 21<br>1011 = 17<br>1100 = 13<br>1101 = 9<br>1110 = 5<br>1111 = 1 |

**Table 5-17. 0x04: SYNC1 – Sync Word, High Byte**

| BIT | FIELD | TYPE | RESET | DESCRIPTION |
|---|---|---|---|---|
| 7:0 | SYNC[15:8] | R/W | 0xD3 | 8 MSB of 16-bit sync word. |

**Table 5-18. 0x05: SYNC0 – Sync Word, Low Byte**

| BIT | FIELD | TYPE | RESET | DESCRIPTION |
|---|---|---|---|---|
| 7:0 | SYNC[7:0] | R/W | 0x91 | 8 LSB of 16-bit sync word. |


Copyright © 2006–2015, Texas Instruments Incorporated

### Table 5-19. 0x06: PKTLEN – Packet Length

| BIT | FIELD | TYPE | RESET | DESCRIPTION |
|---|---|---|---|---|
| 7:0 | PACKET_LENGTH | R/W | 0xFF | Indicates the packet length when fixed length packets are enabled. If variable packet length mode is used, this value indicates the maximum packet length allowed. |

### Table 5-20. 0x08: PKTCTRL0 – Packet Automation Control

| BIT | FIELD | TYPE | RESET | DESCRIPTION |
|---|---|---|---|---|
| 7 | | R0 | | Not Used. |
| 6 | WHITE_DATA | R/W | 0x1 | Turn data whitening on / off<br>0: Whitening off<br>1: Whitening on |
| 5:4 | PKT_FORMAT[1:0] | R/W | 0x0 | Format of TX data:<br>The binary number is the setting and the result is the packet format.<br>00 = Normal mode, use TX FIFO<br>01 = Serial Synchronous mode, data in on GDO0<br>...<br>10 = Random TX mode; sends random data using PN9 generator. Used for test/debug.<br>11 = Asynchronous transparent mode. Data in on GDO0 |
| 3 | | R/W | 0x0 | Not used. |
| 2 | CRC_EN | R/W | 0x1 | 1: CRC calculation enabled<br>0: CRC disabled |
| 1:0 | LENGTH_CONFIG[1:0] | R/W | 0x1 | Configure the packet length:<br>The binary number is the setting and the result is the packet length configuration.<br>00 = Fixed length packets, length configured in PKTLEN register<br>01 = Variable length packets, packet length configured by the first byte after sync word<br>10 = Infinite packet length packets<br>11 = Reserved |

### Table 5-21. 0x09: ADDR – Device Address

| BIT | FIELD | TYPE | RESET | DESCRIPTION |
|---|---|---|---|---|
| 7:0 | DEVICE_ADDRESS [7:0] | R/W | 0x0 | Address used for packet filtration. Optional broadcast addresses are 0 (0x00) and 255 (0xFF). |

### Table 5-22. 0x0A: CHANNR – Channel Number

| BIT | FIELD | TYPE | RESET | DESCRIPTION |
|---|---|---|---|---|
| 7:0 | CHAN[7:0] | R/W | 0x0 | The 8-bit unsigned channel number, which is multiplied by the channel spacing setting and added to the base frequency. |

### Table 5-23. 0x0D: FREQ2 – Frequency Control Word, High Byte

| BIT | FIELD | TYPE | RESET | DESCRIPTION |
|---|---|---|---|---|
| 7:6 | FREQ[23:22] | R | 0x0 | FREQ[23:22] is always 0 (the FREQ2 register is less than 36 with 26 MHz or higher crystal frequency). |
| 5:0 | FREQ[21:16] | R/W | 0x1E | FREQ[23:0] is the base frequency for the frequency synthesiser in increments of $F_{XOSC}$ / 216. $f_{carrier} = \frac{f_{xosc}}{2^{16}} \times FREQ[23:0]$ (6) |

### Table 5-24. 0x0E: FREQ1 – Frequency Control Word, Middle Byte

| BIT | FIELD | TYPE | RESET | DESCRIPTION |
|---|---|---|---|---|
| 7:0 | FREQ[15:8] | R/W | 0xC4 | Ref. FREQ2 register. |

### Table 5-25. 0x0F: FREQ0 – Frequency Control Word, Low Byte

| BIT | FIELD | TYPE | RESET | DESCRIPTION |
|---|---|---|---|---|
| 7:0 | FREQ[7:0] | R/W | 0xEC | Ref. FREQ2 register. |

### Table 5-26. 0x10: MDMCFG4 – Modulator Configuration

| BIT | FIELD | TYPE | RESET | DESCRIPTION |
|---|---|---|---|---|
| 7:4 | Reserved | R0 | 0x08 | Defined on the transceiver version (CC1101). |
| 3:0 | DRATE_E[3:0] | R/W | 0x0C | The exponent of the user specified symbol rate. |

### Table 5-27. 0x11: MDMCFG3 – Modulator Configuration

| BIT | FIELD | TYPE | RESET | DESCRIPTION |
|---|---|---|---|---|
| 7:0 | DRATE_M[7:0] | R/W | 0x22 | The mantissa of the user specified symbol rate. The symbol rate is configured using an unsigned, floating-point number with 9-bit mantissa and 4-bit exponent. The 9th bit is a hidden ‘1’. The resulting data rate is: $\Delta f_{channel} = \frac{f_{xosc}}{2^{18}} \times (256 + CHANSPC_M) \times 2^{CHANSPC_E} \times CHAN$ (7) The default values give a data rate of 115.051 kBaud (closest setting to 115.2 kBaud), assuming a 26.0 MHz crystal. |


Copyright © 2006–2015, Texas Instruments Incorporated

### Table 5-28. 0x12: MDMCFG2 – Modulator Configuration

| BIT | FIELD | TYPE | RESET | DESCRIPTION |
|---|---|---|---|---|
| 7 | Reserved | R0 | 0x0 | Defined on the transceiver version (CC1101). |
| 6:4 | MOD_FORMAT[2:0] | R/W | 0x0 | The modulation format of the radio signal:<br>The binary number is the setting and the result is the modulation format.<br>000 = 2-FSK<br>001 = GFSK<br>010 = N/A<br>011 = ASK/OOK<br>100 = N/A<br>101 = N/A<br>110 = N/A<br>111 = MSK<br>The OOK/ASK pulse shaping feature is only supported for output powers up to –1 dBm.<br>MSK is only supported for data rates above 26 kBaud. |
| 3 | MANCHESTER_EN | 0 | 0x0 | Enables Manchester encoding/decoding.<br>0 = Disable<br>1 = Enable |
| 2:0 | SYNC_MODE[2:0] | 2 | 0x2 | Combined sync-word qualifier mode.<br>The values 0 (000) and 4 (100) disables preamble and sync word transmission. The values 1 (001), 2 (010), 5 (101) and 6 (110) enables 16-bit sync word transmission. The values 3 (011) and 7 (111) enables repeated sync word transmission.<br>The binary number is the setting and the result is the Sync-word qualifier mode (for compatibility with the CC1101 transceiver).<br>000 = No preamble/sync word<br>001 = 15/16 sync word bits detected<br>010 = 16/16 sync word bits detected<br>011 = 30/32 sync word bits detected<br>100 = No preamble/sync, carrier-sense above threshold<br>101 = 15/16 + carrier-sense above threshold<br>110 = 16/16 + carrier-sense above threshold<br>111 = 30/32 + carrier-sense above threshold |

### Table 5-29. 0x13: MDMCFG1 – Modulator Configuration

| BIT | FIELD | TYPE | RESET | DESCRIPTION |
|---|---|---|---|---|
| 7 | FEC_EN | R/W | 0x2 | Enable Forward Error Correction (FEC) with interleaving for packet payload<br>0 = Disable<br>1 = Enable (Only supported for fixed packet length mode, that is, PKTCTRL0.LENGTH_CONFIG=0) |
| 6:4 | NUM_PREAMBLE[2:0] | R/W | 0x2 | Sets the minimum number of preamble bytes to be transmitted.<br>The binary number is the setting and the result is the minimum number of preamble bytes to be transmitted.<br>000 = 2<br>001 = 3<br>010 = 4<br>011 = 6<br>100 = 8<br>101 = 12<br>110 = 16<br>111 = 24 |
| 3:2 | | R0 | | Not Used. |
| 1:0 | CHANSPC_E[1:0] | R/W | 0x2 | 2 bit exponent of channel spacing. |

### Table 5-30. 0x14: MDMCFG0 – Modulator Configuration

| BIT | FIELD | TYPE | RESET | DESCRIPTION |
|---|---|---|---|---|
| 7:0 | CHANSPC_M[7:0] | R/W | 0xF8 | 8-bit mantissa of channel spacing (initial 1 assumed). The channel spacing is multiplied by the channel number CHAN and added to the base frequency. It is unsigned and has the format: $\Delta f_{channel} = \frac{f_{xosc}}{2^{18}} \times (256 + CHANSPC_M) \times 2^{CHANSPC_E} \times CHAN$ (8) The default values give 199.951 kHz channel spacing (the closest setting to 200 kHz), assuming 26.0 MHz crystal frequency. |

### Table 5-31. 0x15: DEVIATN – Modulator Deviation Setting

| BIT | FIELD | TYPE | RESET | DESCRIPTION |
|---|---|---|---|---|
| 7 | | R0 | | Not Used. |
| 6:4 | DEVIATION_E[2:0] | R/W | 0x4 | Deviation exponent. |
| 3 | | R0 | | Not Used. |
| 2:0 | DEVIATION_M[2:0] | R/W | 0x7 | When MSK modulation is enabled: |
| | | | | Specifies the fraction of symbol period (1/8-8/8) during which a phase change occurs (‘0’: +90deg, ‘1’: –90deg). Refer to the SmartRF Studio [11] software for correct DEVIATN setting when using MSK.<br>When 2-FSK/GFSK modulation is enabled:<br>Deviation mantissa, interpreted as a 4-bit value with MSB implicit 1. The resulting frequency deviation is given by Equation 9: $f_{dev} = \frac{f_{xosc}}{2^{17}} \times (8 + DEVIATION_M) \times 2^{DEVIATION_E}$ (9) The default values give ±47.607 kHz deviation, assuming 26.0 MHz crystal frequency.<br>When ASK/OOK modulation is enabled:<br>This setting has no effect. |

### Table 5-32. 0x17: MCSM1 – Main Radio Control State Machine Configuration

| BIT | FIELD | TYPE | RESET | DESCRIPTION |
|---|---|---|---|---|
| 7:6 | | R0 | | Not Used. |
| 5:2 | Reserved | R0 | 0x0C | Defined on the transceiver version (CC1101). |
| 1:0 | TXOFF_MODE[1:0] | R/W | 0x0 | Select what should happen when a packet has been sent (TX):<br>The binary number is the setting and the result is the next state after finishing packet transmission.<br>00 = IDLE<br>01 = FSTXON<br>10 = Stay in TX (start sending preamble)<br>11 = Do not use, not implemented on CC1150 |


Copyright © 2006–2015, Texas Instruments Incorporated

### Table 5-33. 0x18: MCSM0 – Main Radio Control State Machine Configuration

| BIT | FIELD | TYPE | RESET | DESCRIPTION |
|---|---|---|---|---|
| 7:6 | | R0 | | Not Used. |
| 5:4 | FS_AUTOCAL[1:0] | R/W | 0x0 | Automatically calibrate when going to TX, or back to IDLE:<br>The binary number is the setting and the result is when to perform automatic calibration.<br>00 = Never (manually calibrate using SCAL strobe)<br>01 = When going from IDLE to TX (or FSTXON)<br>10 = When going from TX back to IDLE<br>11 = Every 4th time when going from TX to IDLE |
| 3:2 | PO_TIMEOUT | R/W | 0x1 | Programs the number of times the six-bit ripple counter must expire after XOSC has stabilized before CHP_RDY_N goes low.<br>The XOSC is off during power-down and if the regulated digital supply voltage has sufficient time to stabilize while waiting for the crystal to be stable, PO_TIMEOUT can be set to 0. For robust operation it is recommended to use PO_TIMEOUT=2.<br>The binary number is the setting, the result is the expire count, and the definition is the timeout after XOSC start.<br>00 = 1 : Approx. 2.3 µs – 2.7 µs<br>01 = 16 : Approx. 37 µs – 43 µs<br>10 = 64 : Approx. 146 µs – 171 µs<br>11 = 256 : Approx. 585 µs – 683 µs<br>Exact timeout depends on crystal frequency.<br>In order to reduce start up time from the SLEEP state, this field is preserved in powerdown (SLEEP state). |
| 1:0 | Reserved | R0 | | Defined on the transceiver version (CC1101) |

### Table 5-34. 0x22: FREND0 – Front End TX Configuration

| BIT | FIELD | TYPE | RESET | DESCRIPTION |
|---|---|---|---|---|
| 7:6 | | R0 | | Not Used. |
| 5:4 | LODIV_BUF_ CURRENT_TX[1:0] | R/W | 0x1 | Adjusts current TX LO buffer (input to PA). The value to use in register field is given by the SmartRF Studio [11] software. |
| 3 | | R0 | | Not Used. |
| 2:0 | PA_POWER[2:0] | R/W | 0x0 | Selects PA power setting. This value is an index to the PATABLE, which can be programmed with up to 8 different PA settings. In ASK mode, this selects the PATABLE index to use when transmitting a ‘1’. PATABLE index zero is used in ASK when transmitting a ‘0’. The PATABLE settings from index ‘0’ to the PA_POWER value are used for ASK TX shaping, and for power ramp-up/ramp-down at the start/end of transmission in all TX modulation formats. |

### Table 5-35. 0x23: FSCAL3 – Frequency Synthesizer Calibration

| BIT | FIELD | TYPE | RESET | DESCRIPTION |
|---|---|---|---|---|
| 7:6 | FSCAL3[7:6] | R/W | 0x02 | Frequency synthesizer calibration configuration. The value to write in this field before calibration is given by the SmartRF Studio software. |
| 5:4 | CHP_CURR_CAL_EN[1:0] | R/W | 0x02 | Disable charge pump calibration stage when 0. |
| 3:0 | FSCAL3[3:0] | R/W | 0x09 | Frequency synthesizer calibration result register. Digital bit vector defining the charge pump output current, on an exponential scale: I_OUT = I0·2FSCAL3[3:0]/4.<br>Fast frequency hopping without calibration for each hop can be done by calibrating up front for each frequency and saving the resulting FSCAL3, FSCAL2 and FSCAL1 register values. Between each frequency hop, calibration can be replaced by writing the FSCAL3, FSCAL2 and FSCAL1 register values corresponding to the next RF frequency. |

### Table 5-36. 0x24: FSCAL2 – Frequency Synthesizer Calibration

| BIT | FIELD | TYPE | RESET | DESCRIPTION |
|---|---|---|---|---|
| 7:6 | | R0 | | Not Used. |
| 5 | VCO_CORE_H_EN | R/W | 0x0 | Choose high (1)/ low (0) VCO. |
| 5:0 | FSCAL2[5:0] | R/W | 0x0A | Frequency synthesizer calibration result register. VCO current calibration result and override value.<br>Fast frequency hopping without calibration for each hop can be done by calibrating up front for each frequency and saving the resulting FSCAL3, FSCAL2 and FSCAL1 register values. Between each frequency hop, calibration can be replaced by writing the FSCAL3, FSCAL2 and FSCAL1 register values corresponding to the next RF frequency. |

### Table 5-37. 0x25: FSCAL1 – Frequency Synthesizer Calibration

| BIT | FIELD | TYPE | RESET | DESCRIPTION |
|---|---|---|---|---|
| 7:6 | | R0 | | Not Used. |
| 5:0 | FSCAL1[5:0] | R/W | 0x20 | Frequency synthesizer calibration result register. Capacitor array setting for VCO coarse tuning.<br>Fast frequency hopping without calibration for each hop can be done by calibrating up front for each frequency and saving the resulting FSCAL3, FSCAL2 and FSCAL1 register values. Between each frequency hop, calibration can be replaced by writing the FSCAL3, FSCAL2 and FSCAL1 register values corresponding to the next RF frequency. |

### Table 5-38. 0x26: FSCAL0 – Frequency Synthesizer Calibration

| BIT | FIELD | TYPE | RESET | DESCRIPTION |
|---|---|---|---|---|
| 7 | Reserved | R0 | | Not Used. |
| 6:0 | FSCAL0[6:0] | R/W | 0x0D | Frequency synthesizer calibration control. The value to use in register field is given by the SmartRF Studio [11] software. |

### Table 5-39. 0x29: FSTEST – Frequency Synthesizer Calibration Control

| BIT | FIELD | TYPE | RESET | DESCRIPTION |
|---|---|---|---|---|
| 7:0 | FSTEST[7:0] | R/W | 0x57 | For test only. Do not write to this register. |


Copyright © 2006–2015, Texas Instruments Incorporated

**Table 5-40. 0x2A: PTEST – Production Test**

| BIT | FIELD | TYPE | RESET | DESCRIPTION |
|---|---|---|---|---|
| 7:0 | PTEST[7:0] | R/W | 0x7F | Writing 0xBF to this register makes the on-chip temperature sensor available in the IDLE state. The default 0x7F value should then be written back before leaving the IDLE state. Other use of this register is for test only. |

**Table 5-41. 0x2C: TEST2 – Various Test Settings**

| BIT | FIELD | TYPE | RESET | DESCRIPTION |
|---|---|---|---|---|
| 7:0 | TEST2[7:0] | R/W | | The value to use in this register is given by the SmartRF Studio [11] software. |

**Table 5-42. 0x2D: TEST1 – Various Test Settings**

| BIT | FIELD | TYPE | RESET | DESCRIPTION |
|---|---|---|---|---|
| 7:0 | TEST1[7:0] | R/W | 0x21 | The value to use in this register is given by the SmartRF Studio [11] software. |

**Table 5-43. 0x2E: TEST0 – Various Test Settings**

| BIT | FIELD | TYPE | RESET | DESCRIPTION |
|---|---|---|---|---|
| 7:2 | TEST0[7:2] | R/W | 0x02 | The value to use in this register is given by the SmartRF Studio [11] software. |
| 1 | VCO_SEL_CAL_EN | R/W | 0x1 | Enable VCO selection calibration stage when 1. The value to use in this register is given by the SmartRF Studio [11] software. |
| 0 | TEST0[0] | R/W | 0x1 | The value to use in this register is given by the SmartRF Studio [11] software. |

### *5.20.2 Status Register Details*

**Table 5-44. 0x30 (0xF0): PARTNUM – Chip ID**

| BIT | FIELD | TYPE | RESET | DESCRIPTION |
|---|---|---|---|---|
| 7:0 | PARTNUM[7:0] | R | 0x02 | Chip part number. |

**Table 5-45. 0x31 (0xF1): VERSION – Chip ID**

| BIT | FIELD | TYPE | RESET | DESCRIPTION |
|---|---|---|---|---|
| 7:0 | VERSION[7:0] | R | 0x04 | Chip version number.<br>Subject to change without notice |

### Table 5-46. 0x35 (0xF5): MARCSTATE – Main Radio Control State Machine State

| BIT | FIELD | TYPE | RESET | DESCRIPTION |
|---|---|---|---|---|
| 7:5 | Reserved | R0 | | |
| 4:0 | MARC_STATE[4:0] | R | | Main Radio Control FSM State(1)<br>The bit enumerations show the value, the state name, and the state(2).<br>0x00 = SLEEP : SLEEP<br>0x01 = IDLE : IDLE<br>0x02 = XOFF : XOFF<br>0x03 = VCOON_MC : MANCAL<br>0x04 = REGON_MC : MANCAL<br>0x05 = MANCAL : MANCAL<br>0x06 = VCOON : FS_WAKEUP<br>0x07 = REGON : FS_WAKEUP<br>0x08 = STARTCAL : CALIBRATE<br>0x09 = BWBOOST : SETTLING<br>0x0A = FS_LOCK : SETTLING<br>0x0B = N/A : N/A<br>0x0C = ENDCAL : CALIBRATE<br>0x0D = N/A : N/A<br>0x0E = N/A : N/A<br>0x0F = N/A : N/A<br>0x10 = N/A : N/A<br>0x11 = N/A : N/A<br>0x12 = FSTXON : FSTXON<br>0x13 = TX : TX<br>0x14 = TX_END : TX<br>0x15 = N/A : N/A<br>0x16 = TX_UNDERFLOW : TX_UNDERFLOW |

(1) It is not possible to read back the SLEEP or XOFF state numbers because setting CSn low will make the chip enter the IDLE mode from the SLEEP or XOFF states.
(2) State (see Figure 5-11).

### Table 5-47. 0x38 (0xF8): PKTSTATUS – Current GDOx Status

| BIT | FIELD | TYPE | RESET | DESCRIPTION |
|---|---|---|---|---|
| 7:2 | Reserved | R0 | | Defined on the transceiver version (CC1101). |
| 1 | | R0 | | Not Used. |
| 0 | GDO0 | R | | Current GDO0 value. Note: the reading gives the non-inverted value irrespective what IOCFG0.GDO0_INV is programmed to.<br>It is not recommended to check for PLL lock by reading PKTSTATUS[0] with GDO0_CFG = 0x0A. |

### Table 5-48. 0x39 (0xF9): VCO_VC_DAC – Current Setting from PLL Calibration Module

| BIT | FIELD | TYPE | RESET | DESCRIPTION |
|---|---|---|---|---|
| 7:0 | VCO_VC_DAC[7:0] | R | | Status registers for test only. |

### Table 5-49. 0x3A (0xFA): TXBYTES – Underflow and Number of Bytes

| BIT | FIELD | TYPE | RESET | DESCRIPTION |
|---|---|---|---|---|
| 7 | TXFIFO_UNDERFLOW | | R | |
| 6:0 | NUM_TXBYTES | | R | Number of bytes in TX FIFO. |


Copyright © 2006–2015, Texas Instruments Incorporated

# 6 Applications, Implementation, and Layout

**NOTE**

Information in the following applications sections is not part of the TI component specification, and TI does not warrant its accuracy or completeness. TI's customers are responsible for determining suitability of components for their purposes. Customers should validate and test their design implementation to confirm system functionality.

## 6.1 Application Information

### *6.1.1 Typical Application*

A simplified block diagram of CC1150 is shown in Figure 5-1.

Only a few external components are required for using the CC1150. The recommended application circuits are shown in Figure 6-1 and Figure 6-2. The external components are described in Table 6-1, and typical values are given in Table 6-2.

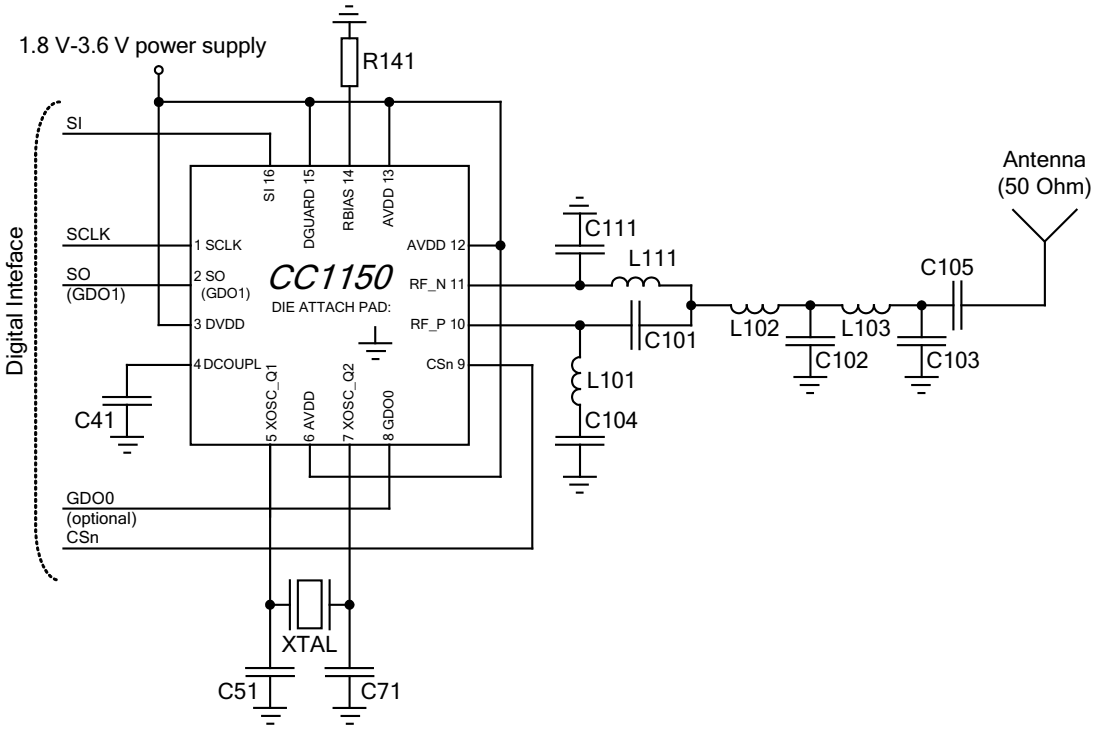


**Figure 6-1. Typical Application and Evaluation Circuit 315/433 MHz (Excluding Supply Decoupling Capacitors)**

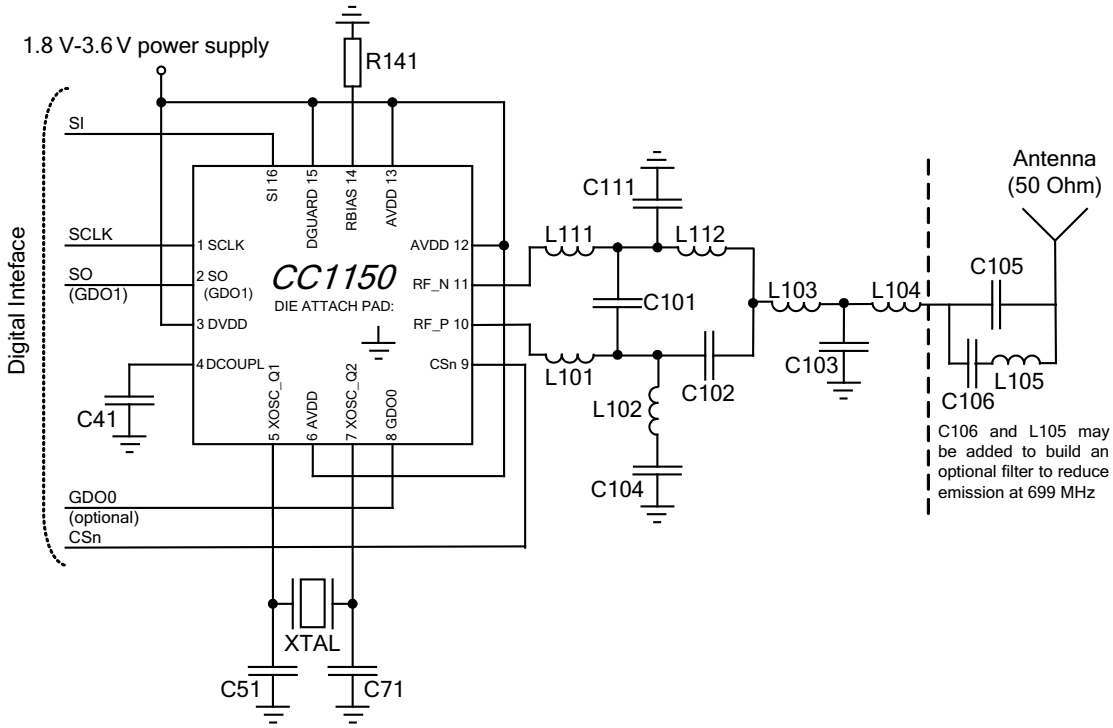


**Figure 6-2. Typical Application and Evaluation Circuit 868/915 MHz (Excluding Supply Decoupling Capacitors)**

**Table 6-1. Overview of External Components (Excluding Supply Decoupling Capacitors)**

| COMPONENT | DESCRIPTION |
|---|---|
| C41 | Decoupling capacitor for on-chip voltage regulator to digital part |
| C51/C71 | Crystal loading capacitors |
| C101/C111 | RF balun/matching capacitors |
| C102 | RF LC filter/matching filter capacitor (315 and 433 MHz). RF balun/matching capacitor (868/915 MHz). |
| C103 | RF LC filter/matching capacitors |
| C104 | RF balun DC blocking capacitor |
| C105 | RF LC filter DC blocking capacitor and part of optional RF LC filter (868/915 MHz) |
| C106 | Part of optional RF LC filter and DC Block (868/915 MHz) |
| L101/L111 | RF balun/matching inductors (inexpensive multi-layer type) |
| L102 | RF LC filter/matching filter inductor (315 and 433 MHz). RF balun/matching inductor (868/915 MHz) (inexpensive multi-layer type) |
| L103 | RF LC filter/matching inductor (inexpensive multi-layer type) |
| L104 | RF LC filter/matching inductor (inexpensive multi-layer type) |
| L105 | Part of optional RF LC filter (868/915 MHz)(inexpensive multi-layer type) |
| R141 | Resistor for internal bias current reference |
| XTAL | 26 to 27 MHz crystal |


Copyright © 2006–2015, Texas Instruments Incorporated

**Table 6-2. Bill of Materials for the Application Circuit(1)**

| COMPONENT | VALUE @ 31 5MHz | VALUE @ 433 MHz | VALUE @ 868/915 MHz |
|---|---|---|---|
| C41 | 100 nF ± 10%, 0402 X5R | | |
| C51 | 27 pF ± 5%, 0402 NP0 | | |
| C71 | 27 pF ± 5%, 0402 NP0 | | |
| C101 | 6.8 pF ± 0.5 pF, 0402 NP0 | 3.9 pF ± 0.25 pF, 0402 NP0 | 1.0 pF ± 0.25 pF, 0402 NP0 |
| C102 | 12 pF ± 5%, 0402 NP0 | 8.2 pF ± 0.5 pF, 0402 NP0 | 1.5 pF ± 0.25 pF, 0402 NP0 |
| C103 | 6.8 pF ± 0.5 pF, 0402 NP0 | 5.6 pF ± 0.5pF, 0402 NP0 | 3.3 pF ± 0.25 pF, 0402 NP0 |
| C104 | 220 pF ± 5%, 0402 NP0 | 220 pF ± 5%, 0402 NP0 | 100 pF ± 5%, 0402 NP0 |
| C105 | 220 pF ± 5%, 0402 NP0 | 220 pF ± 5%, 0402 NP0 | 100 pF ± 5%, 0402 NP0 (12 pF ± 5%, 0402 NP0 if optionally 699 MHz filter is desired) |
| C106 | | | (47 pF ± 5%, 0402 NP0 if optionally 699 MHz filter is desired) |
| C111 | 6.8 pF ± 0.5 pF, 0402 NP0 | 3.9 pF ± 0.25 pF, 0402 NP0 | 1.5 pF ± 0.25pF, 0402 NP0 |
| L101 | 33 nH ± 5%, 0402 monolithic | 27 nH ± 5%, 0402 monolithic | 12 nH ± 5%, 0402 monolithic |
| L102 | 18 nH ± 5%, 0402 monolithic | 22 nH ± 5%, 0402 monolithic | 18 nH ± 5%, 0402 monolithic |
| L103 | 33 nH ± 5%, 0402 monolithic | 27 nH ± 5%, 0402 monolithic | 12 nH ± 5%, 0402 monolithic |
| L104 | | | (12 nH ± 5%, 0402 monolithic if optionally 699 MHz filter is desired) |
| L105 | | | 3.3 nH ± 5%, 0402 monolithic |
| L111 | 33 nH ± 5%, 0402 monolithic | 27 nH ± 5%, 0402 monolithic | 12 nH ± 5%, 0402 monolithic |
| L112 | | | 18 nH ± 5%, 0402 monolithic |
| R141 | 56 kΩ ±1%, 0402 | | |
| XTAL | 26.0 MHz surface mount crystal | | |

(1) Murata LQG15HS and GRM1555C series inductors and capacitors, resistor from the Koa RK73 series, and AT-41CD2 crystal from NDK

## 6.2 Design Requirements

### *6.2.1 Bias Resistor*

The bias resistor R141 is used to set an accurate bias current.

### *6.2.2 Balun and RF Matching*

The components between the RF_N/RF_P pins and the point where the two signals are joined together [(C111, C101, L101 and L111 for the 315/433 MHz design) and (L101, L111, C101, L102, C111, C102 and L112 for the 868/915 MHz reference design)] form a balun that converts the differential RF signal on CC1150 to a single-ended RF signal. C104 is needed for dc blocking. Together with an appropriate LC filter network, the balun components also transform the impedance to match a 50-Ω antenna (or cable). C105 provides dc blocking and is only needed if there is a dc path in the antenna. For the 868/915 MHz reference design, this component may also be used for additional filtering, see *Section 6.2.5*.

Suggested values for 315 MHz, 433 MHz, and 868/915 MHz are listed in Table 6-2.

The balun and LC filter component values and their placement are important to achieve optimal performance. It is highly recommended to follow the CC1150EM reference design (see [1] and [2]). Gerber files and schematics for the reference designs are available for download from CC1150EM433 and CC1150EM868.

### 6.2.3 Crystal

A crystal in the frequency range of 26 to 27 MHz must be connected between the XOSC_Q1 and XOSC_Q2 pins. The oscillator is designed for parallel mode operation of the crystal. In addition, loading capacitors (C51 and C71) for the crystal are required. The loading capacitor values depend on the total load capacitance, $C_L$ , specified for the crystal. The total load capacitance seen between the crystal terminals should equal $C_L$ for the crystal to oscillate at the specified frequency.

$$C_L = \frac{1}{\frac{1}{C_{51}} + \frac{1}{C_{71}}} + C_{parasitic} \tag{10}$$

The parasitic capacitance is constituted by pin input capacitance and PCB stray capacitance. Total parasitic capacitance is typically 2.5 pF.

The crystal oscillator circuit is shown in Figure 6-3. Typical component values for different values of $C_L$ are given in Table 6-3.

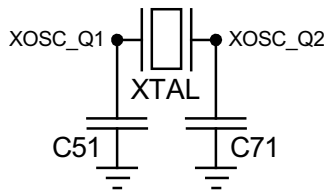


**Figure 6-3. Crystal Oscillator Circuit**

The crystal oscillator is amplitude regulated. This means that a high current is used to start up the oscillations. When the amplitude builds up, the current is reduced to what is necessary to maintain approximately 0.4 Vpp signal swing. This ensures a fast start up, and keeps the drive level to a minimum. The ESR of the crystal should be within the specification in order to ensure a reliable start up (see Section 4.7).

The initial tolerance, temperature drift, aging and load pulling should be carefully specified in order to meet the required frequency accuracy in a certain application.

**Table 6-3. Crystal Oscillator Component Values**

| COMPONENT | $C_L$= 10 pF | $C_L$= 13 pF | $C_L$= 16 pF |
|---|---|---|---|
| C51 | 15 pF | 22 pF | 27 pF |
| C71 | 15 pF | 22 pF | 27 pF |


Copyright © 2006–2015, Texas Instruments Incorporated

### 6.2.4 Reference Signal

The chip can alternatively be operated with a reference signal from 26 to 27 MHz instead of a crystal. This input clock can either be a full-swing digital signal (0 V to VDD) or a sine wave of maximum 1-V peak-to-peak amplitude. The reference signal must be connected to the XOSC_Q1 input. The sine wave must be connected to XOSC_Q1 using a serial capacitor. The XOSC_Q2 line must be left unconnected. C51 and C71 can be omitted when using a reference signal.

### 6.2.5 Additional Filtering

In the 868/915 MHz reference design, C106 and L105 together with C105 build an optional filter to reduce emission at 699 MHz. This filter may be necessary for applications seeking compliance with ETSI EN 300-220, for more information, see *DN017* [6]. If this filtering is not necessary, C105 will work as a DC block (only necessary if there is a DC path in the antenna). C106 and L105 should in that case be left unmounted.

Additional external components (for example, an RF SAW filter) may be used in order to improve the performance in specific applications. The use of wire-wound inductors in the application circuit will also improve the RF performance and give higher output power. For more information, see *DN017* [6].

### 6.2.6 Power Supply Decoupling

The power supply must be properly decoupled close to the supply pins.

**NOTE**

Decoupling capacitors are not shown in the application circuit. The placement and the size of the decoupling capacitors are very important to achieve the optimum performance.

The CC1150EM reference design should be followed closely (see [1] and [2]).

## 6.3 PCB Layout Recommendations

The top layer should be used for signal routing, and the open areas should be filled with metallization connected to ground using several vias.

The area under the chip is used for grounding and shall be connected to the bottom ground plane with several vias for good thermal performance and sufficiently low inductance to ground.

In the CC1150EM reference designs (see [1] and [2]), 5 vias are placed inside the exposed die attached pad. These vias should be “tented” (covered with solder mask) on the component side of the PCB to avoid migration of solder through the vias during the solder-reflow process.

The solder paste coverage should not be 100%. If it is, out gassing may occur during the reflow process, which may cause defects (splattering, solder balling). Using “tented” vias reduces the solder paste coverage below 100%. See Figure 6-4 for top solder resist and top paste masks.

All the decoupling capacitors should be placed as close as possible to the supply pin it is supposed to decouple. Each decoupling capacitor should be connected to the power line (or power plane) by separate vias. The best routing is from the power line (or power plane) to the decoupling capacitor and then to the CC1150 supply pin. Supply power filtering is very important.

Copyright © 2006–2015, Texas Instruments Incorporated

Each decoupling capacitor ground pad should be connected to the ground plane by separate vias. Direct connections between neighboring power pins will increase noise coupling and should be avoided unless absolutely necessary. Routing in the ground plane underneath and between the chip, the balun/RF matching circuit and the decoupling capacitor's ground vias should also be avoided. This improves the grounding and ensures the shortest possible return path for stray currents.

The external components should ideally be as small as possible (0402 is recommended) and surface mount devices are highly recommended. Please note that components smaller than those specified may have differing characteristics.

Precaution should be used when placing the microcontroller in order to avoid noise interfering with the RF circuitry.

It is strongly advised that the CC1150EM reference design (see [1] and [2]) layout is followed very closely in order to get the best performance. Gerber files and schematics for the reference designs are available for download from the TI website.

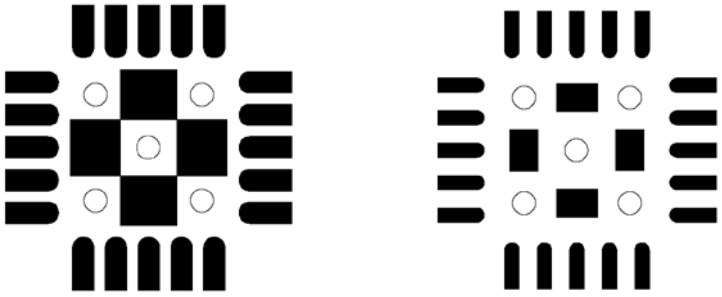

Circles are Vias

**Figure 6-4. Left: Top Solder Resist Mask (Negative) and Right: Top Paste Mask**


Copyright © 2006–2015, Texas Instruments Incorporated

### 6.3.1 Package Description (QLP 16)

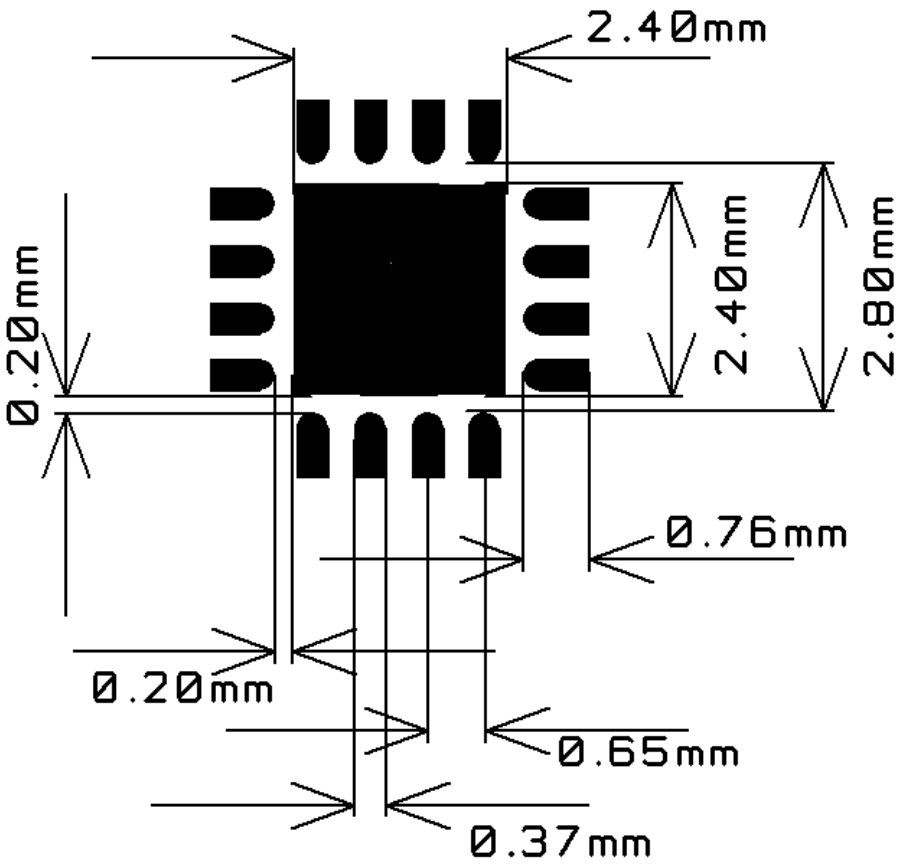


**Figure 6-5. Recommended PCB Layout for Package (QLP 16)**

Figure 6-5 is an illustration only and not to scale. There are five 10-mil diameter via holes distributed symmetrically in the ground pad under the package. See also the CC1150EM reference design ( [1] and [2]).

# 7 Device and Documentation Support

## 7.1 Device Support

### 7.1.1 Device Nomenclature

To designate the stages in the product development cycle, TI assigns prefixes to the part numbers. Each device has one of three prefixes: X, P, or null (no prefix) (for example, *CC1150* is in production; therefore, no prefix is assigned).

Device development evolutionary flow:

**X** Experimental device that is not necessarily representative of the final device's electrical specifications and may not use production assembly flow.

**P** Prototype device that is not necessarily the final silicon die and may not necessarily meet final electrical specifications.

**null** Production version of the silicon die that is fully qualified.

Production devices have been characterized fully, and the quality and reliability of the device have been demonstrated fully. TI's standard warranty applies.

Predictions show that prototype devices (X or P) have a greater failure rate than the standard production devices. Texas Instruments recommends that these devices not be used in any production system because their expected end-use failure rate still is undefined. Only qualified production devices are to be used.

TI device nomenclature also includes a suffix with the device family name. This suffix indicates the package type (for example, *RGV*).

For orderable part numbers of *CC1150* devices in the *RGV* package types, see the Package Option Addendum of this document, the TI website (www.ti.com), or contact your TI sales representative.

## 7.2 Documentation Support

The following documents describe the *CC1150* device. Copies of these documents are available on the Internet at www.ti.com.

1. [1] *CC1150EM 315 – 433 MHz Reference Design* (SWRR041)
2. [2] *CC1150EM 868 – 915 MHz Reference Design* (SWRR042)
3. [3] *DN012 Programming Output Power on CC1100 and CC1150* (SWRA150)
4. [5] *DN006 CC11xx Settings for FCC 15.247 Solutions* (SWRA123)
5. [6] *DN017 CC11xx 868/915 MHz Matching* (SWRA168)
6. [7] *AN058 Antenna Selection Guide* (SWRA161)
7. [8] *CC1150 Errata Notes* (SWRZ018)
8. [9] *DN501 PATABLE Access* (SWRA110)
9. [10] *AN001 SRD Regulations for Licence Free Transceiver Operation* (SWRA090)
10. [11] (SmartRF Studio)
11. [12] *CC1100/CC1150DK and CC2500/CC2550DK Development Kit Examples and Libraries User Manual* (SWRU109)

### 7.2.1 Community Resources

The following links connect to TI community resources. Linked contents are provided "AS IS" by the respective contributors. They do not constitute TI specifications and do not necessarily reflect TI's views; see TI's Terms of Use.


Copyright © 2006–2015, Texas Instruments Incorporated

**TI E2E™ Online Community** ***TI's Engineer-to-Engineer (E2E) Community.*** Created to foster collaboration among engineers. At e2e.ti.com, you can ask questions, share knowledge, explore ideas and help solve problems with fellow engineers.

**TI Embedded Processors Wiki** ***Texas Instruments Embedded Processors Wiki.*** Established to help developers get started with Embedded Processors from Texas Instruments and to foster innovation and growth of general knowledge about the hardware and software surrounding these devices.

### 7.3 Trademarks

SmartRF, E2E are trademarks of Texas Instruments.

### 7.4 Electrostatic Discharge Caution

This integrated circuit can be damaged by ESD. Texas Instruments recommends that all integrated circuits be handled with appropriate precautions. Failure to observe proper handling and installation procedures can cause damage.

ESD damage can range from subtle performance degradation to complete device failure. Precision integrated circuits may be more susceptible to damage because very small parametric changes could cause the device not to meet its published specifications.

### 7.5 Export Control Notice

Recipient agrees to not knowingly export or re-export, directly or indirectly, any product or technical data (as defined by the U.S., EU, and other Export Administration Regulations) including software, or any controlled product restricted by other applicable national regulations, received from disclosing party under nondisclosure obligations (if any), or any direct product of such technology, to any destination to which such export or re-export is restricted or prohibited by U.S. or other applicable laws, without obtaining prior authorization from U.S. Department of Commerce and other competent Government authorities to the extent required by those laws.

### 7.6 Glossary

SLYZ022 — *TI Glossary*.

This glossary lists and explains terms, acronyms, and definitions.

## 8 Mechanical Packaging and Orderable Information

### 8.1 Packaging Information

The following pages include mechanical packaging and orderable information. This information is the most current data available for the designated devices. This data is subject to change without notice and revision of this document. For browser-based versions of this data sheet, refer to the left-hand navigation.

## PACKAGING INFORMATION

| Orderable Device | Status (1) | Package Type | Package Drawing | Pins | Package Qty | Eco Plan (2) | Lead/Ball Finish (6) | MSL Peak Temp (3) | Op Temp (°C) | Device Marking (4/5) | Samples |
|---|---|---|---|---|---|---|---|---|---|---|---|
| CC1150-RTR1 | OBSOLETE | VQFN | RST | 16 | | TBD | Call TI | Call TI | -40 to 85 | CC1150 | |
| CC1150-RTY1 | OBSOLETE | VQFN | RST | 16 | | TBD | Call TI | Call TI | -40 to 85 | CC1150 | |
| CC1150RGVR | ACTIVE | VQFN | RGV | 16 | 2500 | Green (RoHS & no Sb/Br) | CU NIPDAU | Level-3-260C-168 HR | -40 to 85 | CC1150 | Samples |
| CC1150RGVT | ACTIVE | VQFN | RGV | 16 | 250 | Green (RoHS & no Sb/Br) | CU NIPDAU | Level-3-260C-168 HR | -40 to 85 | CC1150 | Samples |
| CC1150RST | OBSOLETE | VQFN | RST | 16 | | TBD | Call TI | Call TI | -40 to 85 | CC1150 | |
| CC1150RSTR | OBSOLETE | VQFN | RST | 16 | | TBD | Call TI | Call TI | -40 to 85 | CC1150 | |
| HPA00452RSTR | OBSOLETE | VQFN | RST | 16 | | TBD | Call TI | Call TI | -40 to 85 | CC1150 | |

(1) The marketing status values are defined as follows:
**ACTIVE:** Product device recommended for new designs.
**LIFEBUY:** TI has announced that the device will be discontinued, and a lifetime-buy period is in effect.
**NRND:** Not recommended for new designs. Device is in production to support existing customers, but TI does not recommend using this part in a new design.
**PREVIEW:** Device has been announced but is not in production. Samples may or may not be available.
**OBSOLETE:** TI has discontinued the production of the device.

(2) Eco Plan - The planned eco-friendly classification: Pb-Free (RoHS), Pb-Free (RoHS Exempt), or Green (RoHS & no Sb/Br) - please check http://www.ti.com/productcontent for the latest availability information and additional product content details.
**TBD:** The Pb-Free/Green conversion plan has not been defined.
**Pb-Free (RoHS):** TI's terms "Lead-Free" or "Pb-Free" mean semiconductor products that are compatible with the current RoHS requirements for all 6 substances, including the requirement that lead not exceed 0.1% by weight in homogeneous materials. Where designed to be soldered at high temperatures, TI Pb-Free products are suitable for use in specified lead-free processes.
**Pb-Free (RoHS Exempt):** This component has a RoHS exemption for either 1) lead-based flip-chip solder bumps used between the die and package, or 2) lead-based die adhesive used between the die and leadframe. The component is otherwise considered Pb-Free (RoHS compatible) as defined above.
**Green (RoHS & no Sb/Br):** TI defines "Green" to mean Pb-Free (RoHS compatible), and free of Bromine (Br) and Antimony (Sb) based flame retardants (Br or Sb do not exceed 0.1% by weight in homogeneous material)

(3) MSL, Peak Temp. - The Moisture Sensitivity Level rating according to the JEDEC industry standard classifications, and peak solder temperature.

(4) There may be additional marking, which relates to the logo, the lot trace code information, or the environmental category on the device.

(5) Multiple Device Markings will be inside parentheses. Only one Device Marking contained in parentheses and separated by a "~" will appear on a device. If a line is indented then it is a continuation of the previous line and the two combined represent the entire Device Marking for that device.

(6) Lead/Ball Finish - Orderable Devices may have multiple material finish options. Finish options are separated by a vertical ruled line. Lead/Ball Finish values may wrap to two lines if the finish value exceeds the maximum column width.

**Important Information and Disclaimer:**The information provided on this page represents TI's knowledge and belief as of the date that it is provided. TI bases its knowledge and belief on information provided by third parties, and makes no representation or warranty as to the accuracy of such information. Efforts are underway to better integrate information from third parties. TI has taken and continues to take reasonable steps to provide representative and accurate information but may not have conducted destructive testing or chemical analysis on incoming materials and chemicals. TI and TI suppliers consider certain information to be proprietary, and thus CAS numbers and other limited information may not be available for release.

In no event shall TI's liability arising out of such information exceed the total purchase price of the TI part(s) at issue in this document sold by TI to Customer on an annual basis.

## TAPE AND REEL INFORMATION

**REEL DIMENSIONS**

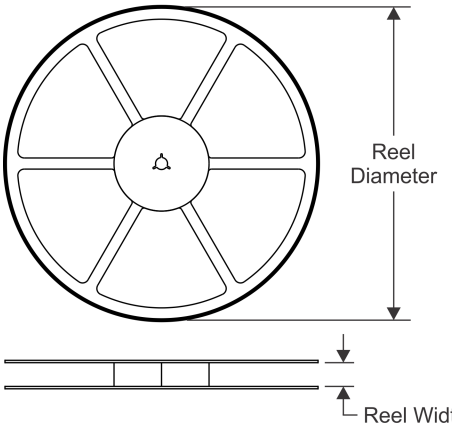


**TAPE DIMENSIONS**

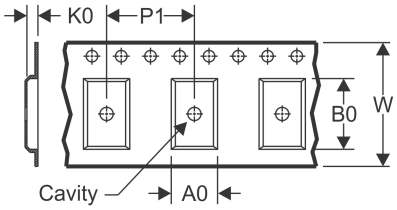


| | |
|---|---|
| A0 | Dimension designed to accommodate the component width |
| B0 | Dimension designed to accommodate the component length |
| K0 | Dimension designed to accommodate the component thickness |
| W | Overall width of the carrier tape |
| P1 | Pitch between successive cavity centers |

**QUADRANT ASSIGNMENTS FOR PIN 1 ORIENTATION IN TAPE**

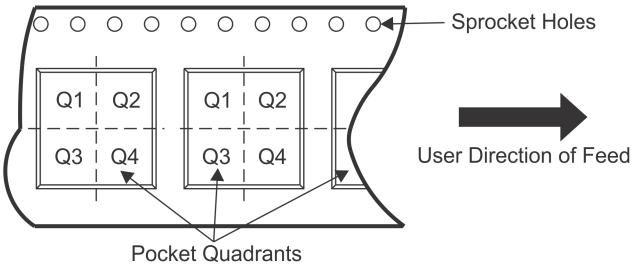


*All dimensions are nominal

| Device | Package Type | Package Drawing | Pins | SPQ | Reel Diameter (mm) | Reel Width W1 (mm) | A0 (mm) | B0 (mm) | K0 (mm) | P1 (mm) | W (mm) | Pin1 Quadrant |
|---|---|---|---|---|---|---|---|---|---|---|---|---|
| CC1150RGVR | VQFN | RGV | 16 | 2500 | 330.0 | 12.4 | 4.3 | 4.3 | 1.5 | 8.0 | 12.0 | Q2 |
| CC1150RGVT | VQFN | RGV | 16 | 250 | 180.0 | 12.4 | 4.3 | 4.3 | 1.5 | 8.0 | 12.0 | Q2 |

**TAPE AND REEL BOX DIMENSIONS**

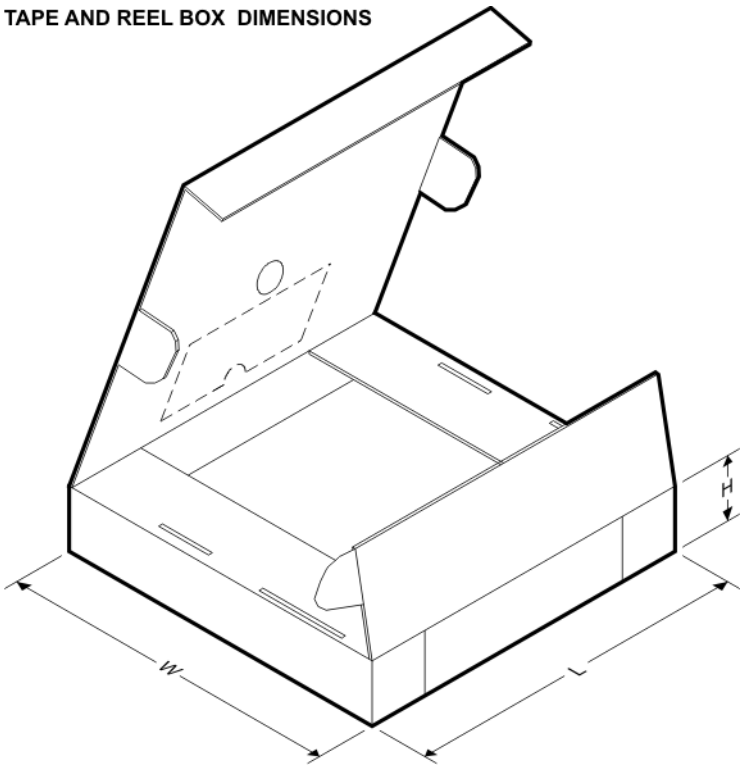


*All dimensions are nominal

| Device | Package Type | Package Drawing | Pins | SPQ | Length (mm) | Width (mm) | Height (mm) |
|---|---|---|---|---|---|---|---|
| CC1150RGVR | VQFN | RGV | 16 | 2500 | 336.6 | 336.6 | 28.6 |
| CC1150RGVT | VQFN | RGV | 16 | 250 | 210.0 | 185.0 | 35.0 |

RGV (S-PVQFN-N16) PLASTIC QUAD FLATPACK NO-LEAD

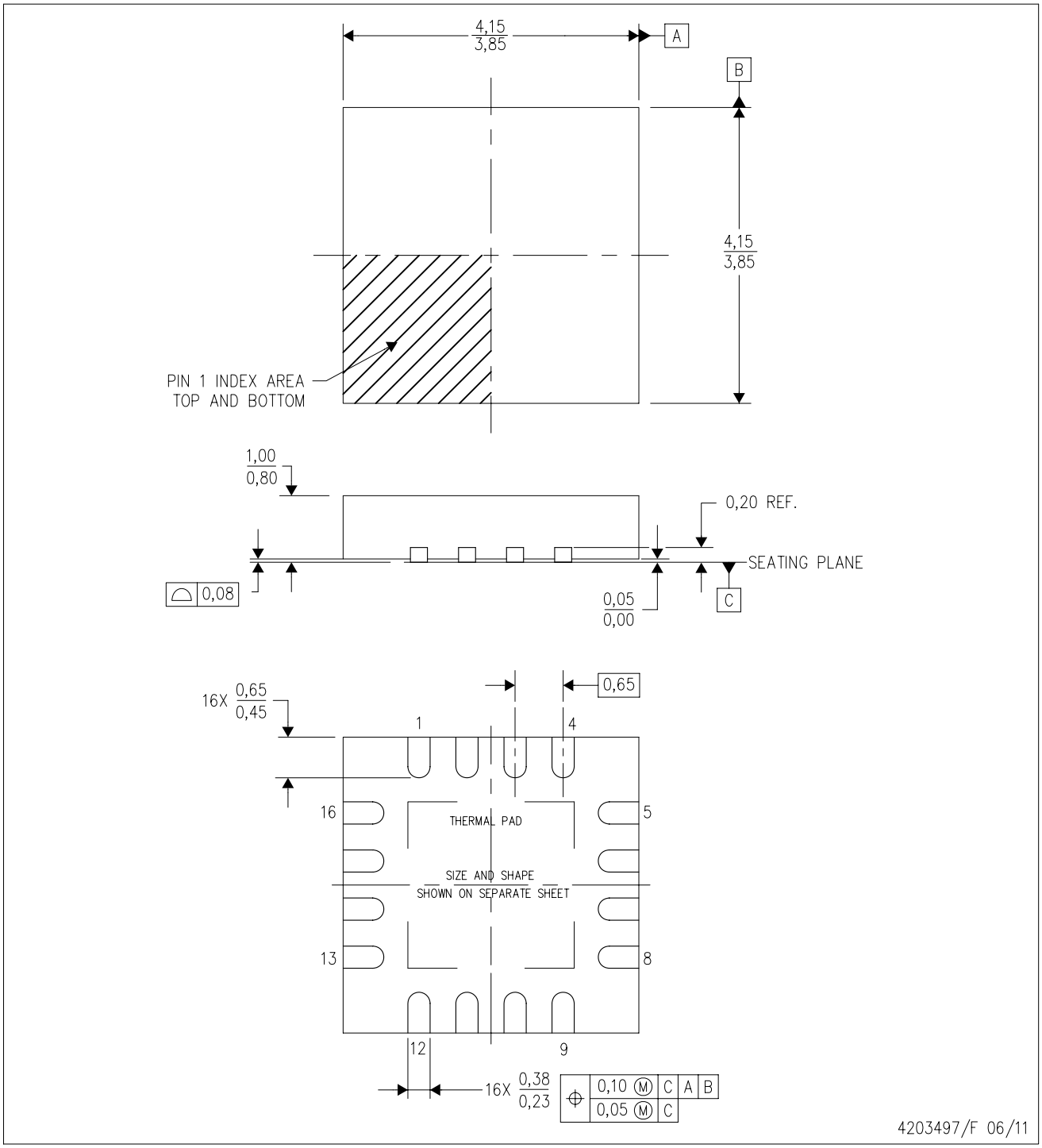


NOTES:
A. All linear dimensions are in millimeters. Dimensioning and tolerancing per ASME Y14.5M-1994.
B. This drawing is subject to change without notice.
C. Quad Flatpack, No-leads (QFN) package configuration.
D. The package thermal pad must be soldered to the board for thermal and mechanical performance.
E. See the additional figure in the Product Data Sheet for details regarding the exposed thermal pad features and dimensions.
F. Falls within JEDEC MO-220.

RGV (S–PVQFN–N16) PLASTIC QUAD FLATPACK NO–LEAD

THERMAL INFORMATION

This package incorporates an exposed thermal pad that is designed to be attached directly to an external heatsink. The thermal pad must be soldered directly to the printed circuit board (PCB). After soldering, the PCB can be used as a heatsink. In addition, through the use of thermal vias, the thermal pad can be attached directly to the appropriate copper plane shown in the electrical schematic for the device, or alternatively, can be attached to a special heatsink structure designed into the PCB. This design optimizes the heat transfer from the integrated circuit (IC).

For information on the Quad Flatpack No–Lead (QFN) package and its advantages, refer to Application Report, QFN/SON PCB Attachment, Texas Instruments Literature No. SLUA271. This document is available at www.ti.com.

The exposed thermal pad dimensions for this package are shown in the following illustration.

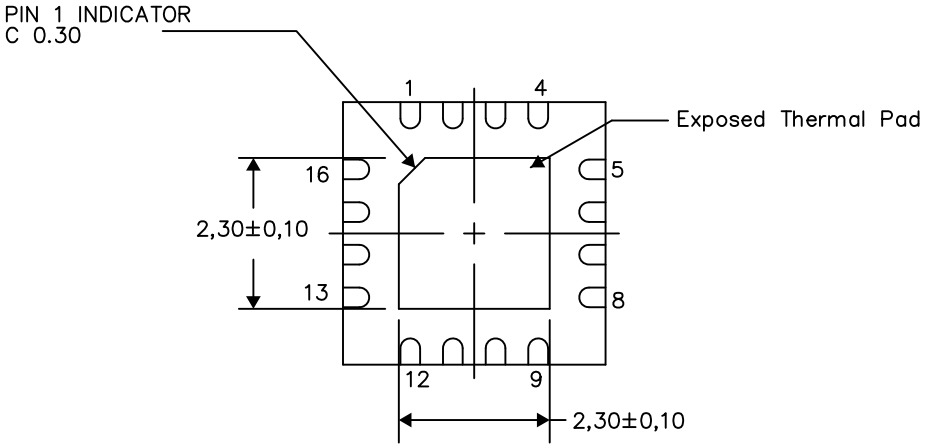


Bottom View

Exposed Thermal Pad Dimensions

4206351–4/L 05/13

NOTE: All linear dimensions are in millimeters

RST (S–PQFP–N16) PLASTIC QUAD FLATPACK

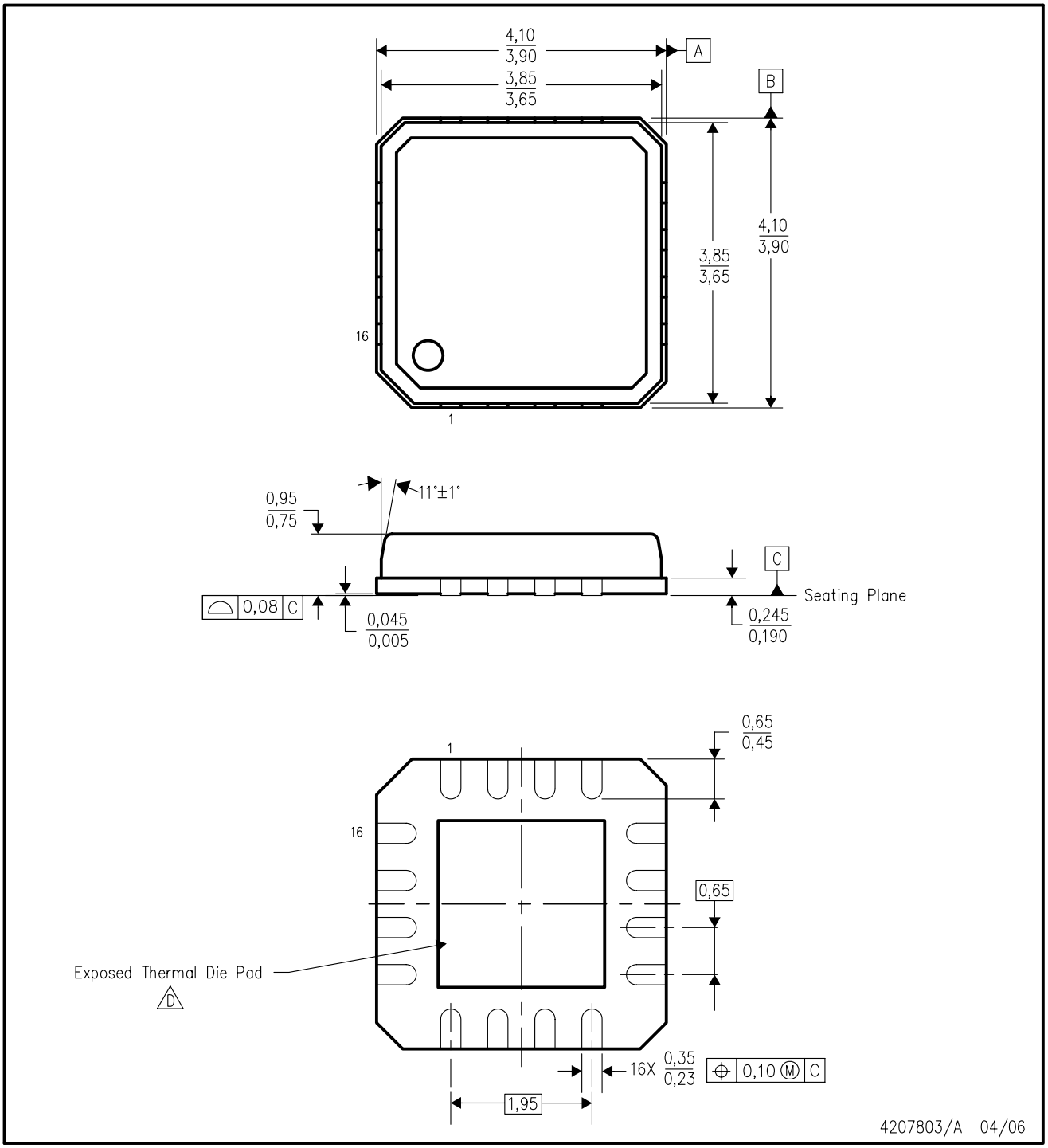


NOTES:
A. All linear dimensions are in millimeters.
B. This drawing is subject to change without notice.
C. QFN (Quad Flatpack No–Lead) Package configuration.
D. The package thermal pad must be soldered to the board for thermal and mechanical performance. See the Product Data Sheet for details regarding the exposed thermal pad dimensions.

## IMPORTANT NOTICE

Texas Instruments Incorporated (TI) reserves the right to make corrections, enhancements, improvements and other changes to its semiconductor products and services per JESD46, latest issue, and to discontinue any product or service per JESD48, latest issue. Buyers should obtain the latest relevant information before placing orders and should verify that such information is current and complete.

TI's published terms of sale for semiconductor products (http://www.ti.com/sc/docs/stdterms.htm) apply to the sale of packaged integrated circuit products that TI has qualified and released to market. Additional terms may apply to the use or sale of other types of TI products and services.

Reproduction of significant portions of TI information in TI data sheets is permissible only if reproduction is without alteration and is accompanied by all associated warranties, conditions, limitations, and notices. TI is not responsible or liable for such reproduced documentation. Information of third parties may be subject to additional restrictions. Resale of TI products or services with statements different from or beyond the parameters stated by TI for that product or service voids all express and any implied warranties for the associated TI product or service and is an unfair and deceptive business practice. TI is not responsible or liable for any such statements.

Buyers and others who are developing systems that incorporate TI products (collectively, "Designers") understand and agree that Designers remain responsible for using their independent analysis, evaluation and judgment in designing their applications and that Designers have full and exclusive responsibility to assure the safety of Designers' applications and compliance of their applications (and of all TI products used in or for Designers' applications) with all applicable regulations, laws and other applicable requirements. Designer represents that, with respect to their applications, Designer has all the necessary expertise to create and implement safeguards that (1) anticipate dangerous consequences of failures, (2) monitor failures and their consequences, and (3) lessen the likelihood of failures that might cause harm and take appropriate actions. Designer agrees that prior to using or distributing any applications that include TI products, Designer will thoroughly test such applications and the functionality of such TI products as used in such applications.

TI's provision of technical, application or other design advice, quality characterization, reliability data or other services or information, including, but not limited to, reference designs and materials relating to evaluation modules, (collectively, "TI Resources") are intended to assist designers who are developing applications that incorporate TI products; by downloading, accessing or using TI Resources in any way, Designer (individually or, if Designer is acting on behalf of a company, Designer's company) agrees to use any particular TI Resource solely for this purpose and subject to the terms of this Notice.

TI's provision of TI Resources does not expand or otherwise alter TI's applicable published warranties or warranty disclaimers for TI products, and no additional obligations or liabilities arise from TI providing such TI Resources. TI reserves the right to make corrections, enhancements, improvements and other changes to its TI Resources. TI has not conducted any testing other than that specifically described in the published documentation for a particular TI Resource.

Designer is authorized to use, copy and modify any individual TI Resource only in connection with the development of applications that include the TI product(s) identified in such TI Resource. NO OTHER LICENSE, EXPRESS OR IMPLIED, BY ESTOPPEL OR OTHERWISE TO ANY OTHER TI INTELLECTUAL PROPERTY RIGHT, AND NO LICENSE TO ANY TECHNOLOGY OR INTELLECTUAL PROPERTY RIGHT OF TI OR ANY THIRD PARTY IS GRANTED HEREIN, including but not limited to any patent right, copyright, mask work right, or other intellectual property right relating to any combination, machine, or process in which TI products or services are used. Information regarding or referencing third-party products or services does not constitute a license to use such products or services, or a warranty or endorsement thereof. Use of TI Resources may require a license from a third party under the patents or other intellectual property of the third party, or a license from TI under the patents or other intellectual property of TI.

TI RESOURCES ARE PROVIDED "AS IS" AND WITH ALL FAULTS. TI DISCLAIMS ALL OTHER WARRANTIES OR REPRESENTATIONS, EXPRESS OR IMPLIED, REGARDING RESOURCES OR USE THEREOF, INCLUDING BUT NOT LIMITED TO ACCURACY OR COMPLETENESS, TITLE, ANY EPIDEMIC FAILURE WARRANTY AND ANY IMPLIED WARRANTIES OF MERCHANTABILITY, FITNESS FOR A PARTICULAR PURPOSE, AND NON-INFRINGEMENT OF ANY THIRD PARTY INTELLECTUAL PROPERTY RIGHTS. TI SHALL NOT BE LIABLE FOR AND SHALL NOT DEFEND OR INDEMNIFY DESIGNER AGAINST ANY CLAIM, INCLUDING BUT NOT LIMITED TO ANY INFRINGEMENT CLAIM THAT RELATES TO OR IS BASED ON ANY COMBINATION OF PRODUCTS EVEN IF DESCRIBED IN TI RESOURCES OR OTHERWISE. IN NO EVENT SHALL TI BE LIABLE FOR ANY ACTUAL, DIRECT, SPECIAL, COLLATERAL, INDIRECT, PUNITIVE, INCIDENTAL, CONSEQUENTIAL OR EXEMPLARY DAMAGES IN CONNECTION WITH OR ARISING OUT OF TI RESOURCES OR USE THEREOF, AND REGARDLESS OF WHETHER TI HAS BEEN ADVISED OF THE POSSIBILITY OF SUCH DAMAGES.

Unless TI has explicitly designated an individual product as meeting the requirements of a particular industry standard (e.g., ISO/TS 16949 and ISO 26262), TI is not responsible for any failure to meet such industry standard requirements.

Where TI specifically promotes products as facilitating functional safety or as compliant with industry functional safety standards, such products are intended to help enable customers to design and create their own applications that meet applicable functional safety standards and requirements. Using products in an application does not by itself establish any safety features in the application. Designers must ensure compliance with safety-related requirements and standards applicable to their applications. Designer may not use any TI products in life-critical medical equipment unless authorized officers of the parties have executed a special contract specifically governing such use. Life-critical medical equipment is medical equipment where failure of such equipment would cause serious bodily injury or death (e.g., life support, pacemakers, defibrillators, heart pumps, neurostimulators, and implantables). Such equipment includes, without limitation, all medical devices identified by the U.S. Food and Drug Administration as Class III devices and equivalent classifications outside the U.S.

TI may expressly designate certain products as completing a particular qualification (e.g., Q100, Military Grade, or Enhanced Product). Designers agree that it has the necessary expertise to select the product with the appropriate qualification designation for their applications and that proper product selection is at Designers' own risk. Designers are solely responsible for compliance with all legal and regulatory requirements in connection with such selection.

Designer will fully indemnify TI and its representatives against any damages, costs, losses, and/or liabilities arising out of Designer's non-compliance with the terms and provisions of this Notice.

Mailing Address: Texas Instruments, Post Office Box 655303, Dallas, Texas 75265
Copyright © 2017, Texas Instruments Incorporated